Cold Climate Housing Research Center
CCHRC

Prepared for:
The Newtok Village Council
PO Box 5596
Newtok, Alaska 99559

MERTARVIK

MULTI-PURPOSE BUILDING

Retrofit Feasibility Study

January 24, 2016

Prepared by:
The Cold Climate
Housing Research Center
1000 Fairbanks, AK 99708
907.457.3454
www.cchrc.org

[This page intentionally left blank]

TABLE OF CONTENTS

Introduction

Executive Summary P.05
Project Description P.06

Existing Conditions

Literature Review: P.07
Site Visit P.09
Implications for Retrofit Feasibility P.13

Recommendations

Summary P.14
Stage 1: Protect the Foundation P.15
Stage 2: Construct the Shell. P.21

Materials & Cost Analysis

Stage 2 Materials List P.24
Stage 2 Materials Costs P.28
Stage 2 Project Cost Summary P.36

Appendix

Appendix A: SIP Roof Best Practices P.38
Appendix B: Shell Construction Drawings P.40

This page intentionally left blank

COLD CLIMATE HOUSING RESEARCH CENTER

CCHRC

Corporate Supporters
ABS Alaskan
Alaska Housing Finance Corporation (AHFC)
Capitol Glass/ Northerm Windows
Chena Hot Springs Resort
Cook Inlet Housing Authority
Demilec (USA) Inc.
GW Scientific
Insulfoam, LLC
Interior Alaska Building Association (IABA)
Interior Regional Housing Authority
Lucky Supply
Norton Sound Health Corp
Panasonic Eco Solutions
Rasmuson Foundation
Robert Grove
Spenard Builders Supply (SBS)
Thermo-Kool of Alaska
Triodetic, Inc.
Usibelli Coal Mine, Inc.
Wallace Foundation
Wisdom & Associate

Foundation Supporters
Denali State Bank
Ghemm Co.
Hébert Homes
Lifewater Engineering
Mt. McKinley
Northern Southeast Alaska Building Industry Assoc.
Spinell Homes, Inc.

Board of Directors
Bert Bell, Chair
Andre Spinelli, Vice Chair
Alan Wilson, Sec
Aaron Hines, Treas
Joe Beedle
Scott Cragun
Daniel Fauske
Michael Hoffman
Dave Owens
Dena Strait
Daniel White

To:
Paul Charles
Romy Cadiente
Newtok Village Council
Newtok, Alaska

The Cold Climate Housing Research Center is pleased to have been tasked by the Newtok Village Council to complete a feasibility study on the construction of the Mertarvik Multi-Purpose Building, formerly known as the Mertarvik Evacuation Center (MEC). CCHRC has been deeply committed to aiding the people of Newtok in any way that adds to the larger relocation effort to the new town site at Mertarvik. The MEC project has undergone many changes and challenges since CCHRC and the community last worked on the concept in 2009. We are honored to be invited back to the table to work on finishing this important building.

The following report describes an in-depth analysis of the project up to this point, observations on site, and recommendations for finishing the project in a constructive and meaningful way. As the Council is well aware, both construction costs and energy costs in rural Alaska remain high, even as funding is becoming less available. Leadership of the Council has shown wisdom of their efforts to find a way to complete the building economically, while insuring that the MEC is energy efficient and long lasting. The results should create a useful facility that is not a cost burden to maintain and operate.

As Alaskan Communities are faced with adapting to a changing climate, Newtok will be an inspiration to others burdened with the necessity to relocate their communities. The Council's commitment to finish the MEC will set the stage for following activities to establishment Mertarvik as a viable and healthy village for generations.

All of us at the Cold Climate Housing Research Center wish the Newtok Village Council success in moving forward with the completion of this important structure, and pledge our support in future efforts.

Sincerely,

Jack Hébert

P.O. Box 82489, Fairbanks, AK 99708 + 907.457.3454 + Fax: 907.457.3456
www.cchrc.org

PROJECT DESCRIPTION

The Mertarvik Evacuation Center

In 2015, CCHRC was asked by the Newtok Village Council (NVC) to provide an assessment of the Mertarvik Evacuation Center (MEC) Project. The MEC project began in 2008, and has passed through various stages of funding, design, construction, and change in that time. A brief timeline of the MEC project is below:

MEC TIMELINE

2008: At the invitation of the Newtok Planning Group and the former Newtok Traditional Council, CCHRC works with the community to create a concept design for a place of refuge at the Mertarvik site that could serve multiple purposes over the course of the relocation from Newtok to Mertarvik. In 2009 CCHRC publishes this concept design in a 30% Design Analysis Report (DAR) for the Tribe.

2010: DOT/PF (Project Manager), PDC Engineering, and Bezek Durst Seiser (BDS), Architects are awarded the contract to take the 30% DAR and produce Construction Documents for the building. The foundation is changed from earth-bermed on bedrock to a raised steel pile foundation. The floorplan, roof structure, and mechanical approach is also changed.

2011: The foundation for the MEC is constructed by Cornerstone Construction. The rest of the building cannot be completed due to budgetary concerns.

2012: DOT/PF and BDS are released from the project and a redesign commences. The redesign is taken up by George Watt Architects of Colorado. Working with Earthcore, a producer of Structurally-Insulated Panels (SIPs), they redesign a shell for the building at roughly 75% design.

2013: Earthcore SIPs are delivered to the site. However, they are the wrong thickness. 6-5/8" instead of the specified 10-1/4". The frame is not constructed. George Watt and Earthcore are released from the project.

May 2015: Summit Construction of Tok, Alaska, submits an Assessment and Construction Feasibility Study of the MEC foundation and design. The report declares the foundation sound, and posits strategies to complete the building. The strategies in the report outline a cost of $300,000 to finish design and $601/SF - $730/SF to finish the building. The Newtok Village Council (NVC) deems this too expensive to be feasible, and begins looking for other strategies.

November 2015: CCHRC is invited by the NVC to travel to Mertarvik and advise the Council on the Summit Report, the MEC Assessment, and the strategies for completing the building.

The NVC requested that CCHRC perform the following tasks:

1. Review/assess the Summit Construction Report and familiarize deficiencies in such report identified by the owner.
2. Review and assess all plans: the original CCHRC design, DOT/PF MEC design, Earthcore SIPs MEC design.
3. Travel to Mertarvik in order to review and assess the existing MEC foundation.
4. While at Mertarvik, perform an inspection/ inventory of SIPs at Mertarvik.
5. Develop alternative action plans and cost estimates including alternatives within existing budgets and or 150% of existing budget.

EXISTING CONDITIONS

Literature Review:

MEC Plans Assessment and Construction Feasibility Study

As requested by NVC, CCHRC Staff reviewed the following documents:
1. Summit Consulting Services, Inc: Mertarvik Evacuation Center Plans Assessment and Construction Feasibility Study
2. Alaska DOT/PF Mertarvik Evacuation Center Construction Plans Bid Set
3. George Watt Architecture Sheets A2.0, A2.1, and A2.2 for redesigned Mertarvik Evacuation Center
4. Mertarvik Evacuation Center Structural Insulated Panels Specifications.

Summit Consulting Services Assessment and Feasibility Study

In May 2015 Summit Consulting completed a thorough and detailed assessment of the MEC. Its report analyzes challenges to the project that led to its eventual discontinuation and proposes two feasible alternatives to remobilizing the project and finishing the building. In the interest of avoiding repetition of work, this report began with a literature review of the Summit Report. NVC requested that CCHRC Staff pay particular attention to the design and costs associated with finishing the building, as Summit's plans were deemed by NVC to be prohibitively expensive.

Key Observations from Literature Review:

- The SIPs were delivered to Mertarvik, and one crate was disassembled and inspected. It appears that the full building envelope was delivered to the site. However, the SIPs were not consistent with the procurement document specifications. They are 6-3/8" thick with 7/16" thick oriented strand board (OSB) sheathing. This is significant because the SIPs were specified to be 10-1/4" thick. Mertarvik is in a very cold region and energy costs are likely to be quite high in the new village. The R-value of the delivered SIP panels is 40% less than specified (R-33 vs. R-55.5) and will result in significantly higher heating costs for the building. It is not in the best interests of the community to build a building that they will not be able to afford to heat. Additionally, SIPs in Alaska should be sheathed in plywood as opposed to OSB, which is significantly more vulnerable to water infiltration, swelling, and rot. The SIPs will need to be protected.
- Although the foundation of the MEC was designed by one party (DOT/BDS/PDC), and the SIP shell was designed by another (Watt/Earthcore), "there appears that there is not a conflict pertaining to the existing foundation and the use of the SIPs as designed. Framing plans utilizing the SIPs were approved by the Fire Marshal for the SIP building but that permit has expired." (Summit, 2)
- Summit was not able to make a site visit to Mertarvik, which is remote and not accessible for part of the year. CCHRC Staff were requested to visit the site to inspect the foundation, SIPs, and other materials. A description of that site visit is included in this report.
- Summit analyzed both designs. The DOT/BDS design called for spray foam insulation, while the Watt Design called for SIPs. Summit recommends spraying polyurethane insulation to the inside of the structure if the DOT/BDS design is selected.
- The Glulam beams incorporated by BDS are custom-made and expensive, and would also require heavy equipment and specialized labor. The plan to use spray foam insulation also requires specialized equipment, however, this equipment would likely already be at the site for ongoing housing projects. The delivery of the spray foam is a logistical challenge. Spray foam barrels cannot be allowed to freeze, so barge delivery would

need to be timed correctly. If flown, the barrels would need to be transported by boat from the Newtok Airstrip.

- The SIP structure delivered by Earthcore and Watt Architects is also evaluated in the literature. Summit recommends that the wall cross section include an interior wall finish, the SIP, 2x4 battens, 1-1/2" XPS insulation board followed by siding.
- Summit modeled the two buildings and found that the original BDS design would use 11% less heating fuel than the Watt design. The SIP design is recorded as being R-38.5 plus R-7.5 for the 1.5" of rigid insulation applied to the outside (Watt plans A2.2.2 and A2.2.3). However, this wall section is cause for concern. If the battens create an air gap between the SIP and the layer of XPS, then the R-value of the XPS would be negated. The order of assembly as drawn on the plans would need to be adjusted in order to provide the desired R-value. Additionally, CCHRC uses an industry-accepted aged R-value of R-6 per inch for this polyurethane foam material. CCHRC calculates that the overall aged R-value of the assembly would be R-33 for the SIP, with no added R-value for the XPS in that arrangement.
- Summit provided two options for roof systems: one with dormers in the loft and one without, that are both less costly and more efficient than the BDS plans. This report evaluates these two options and posits a third option.
- Summit concludes that the George Watt plans are not finalized. "There were minimal structural and no mechanical and electrical disciplines included in the plans. The architectural plans were effectively at the 75% design level… Even though the SIP panels arrived in the summer of 2012 and a construction permit was granted, no construction took place. Subsequent discussions with the Department of Fire and Life Safety resulted in an agreement whereby the completed plans would be provided prior to any construction taking place." (Summit, 9-10)
- Summit interviewed all team members involved in the design and construction of the MEC foundation, analyzed the blow counts, dynamic pile strain tests, and factors of safety. The piles of the MEC were driven to between 20-34' and rest on bedrock. The Summit Report concludes that the existing pile foundation is more than adequate to support the MEC building. "A sacrificial deck was placed over the trusses and I-joists after the foundation was completed. The plywood decking was coated with a black mastic sealant which helps shed water and snow away from the structural members below. The decking is beginning to weather, and CCHRC was asked to inspect the protective decking on the site visit. This is discussed in the Site Visit Section.
- The Summit report concludes that the foundation as constructed is suitable for either the original plan or the revised SIPs plan. Because the foundation rests on bedrock, the difference in loads will not be an issue.
- A crate inventory was performed by David Cramer during the summer of 2013, and Summit concludes from his findings that 570 were delivered to site. However, during the inventory one crate was opened and all 30 SIPs from that crate were left out in the weather. When CCHRC staff visited the site in 2015 these SIPs had deteriorated to the point where they are no longer usable. This leaves 540 SIPs on site. The original design calls for 558 SIPs. "It is clear that the SIPs manufactured and shipped do not match the procurement specifications which indicate a 10-3/4" thickness. We [Summit] have found no indication of when or how this change was implemented or agreed to." (Summit, 16).
- Earthcore SIPs' parent company may still exist, but its Alaska branch Kenai Manufacturing LLC, does not appear to be in business at this time.
- To finish the MEC building, the Summit Report states that $300,000 is needed for design. For construction, depending on which of the two strategies are selected, costs will run $601/SF or $730/SF, and the annual O&M costs will be approximately $45,000.

CCHRC Conclusions from Literature Review

- Summit's Report is thorough and professional. Its research is currently the most comprehensive review of the challenges facing the completion of the MEC building, and should be considered a primer to future contractors involved in the project.
- The steel pile foundation of the MEC, although it pertains to an earlier design iteration, is structurally sound and robust. The eventual completion of the building should be attainable without significant changes to the foundation as built.

- However, the wood floor decking of the MEC is vulnerable to decay, rot, and eventual loss. An inspection of the floor system was deemed necessary. If possible, methods of protecting the decking from further degradation should be considered a first step in the critical path of finishing the project.
- Since the SIPs are already at site, they represent an asset that can be used in the completion of the project. Ordering new materials will be more expensive. However, NVC was not sure if the SIP panels were still usable. If they were found to be in good condition during the site visit, the SIPs still do not have the R-value specified in procurement, and the cost of heating the building may turn the MEC into an untenable financial liability for the new community instead of a resource. If the SIPs are to be incorporated into the completed building, some method of adding R-value to the structure will need to be investigated.
- The Summit Report posits two structural modifications for the MEC that greatly simplify the original design. However, the NVC is concerned about the procurement of heavy equipment necessary for these changes, as much of the heavy equipment used in the construction of the foundation has been demobilized and removed. The current state of heavy equipment at the site was unknown before the site visit. Additionally, the report only addresses gravity loads, not shear/lateral loads. CCHRC will use these strategies posited as a starting point, and will complete a structural strategy for the building.
- The cost of completing the building outlined in the Summit Report is significant, and it will be challenging for NVC to find lump sum funding for this project amidst a long list of other needs for the new community site. Methods to reduce cost will need to be considered, including a staged approach that emphasizes prioritized steps towards completion that can be funded separately.

Site Visit

On October 29, 2015 CCHRC design staff performed a site inspection with the following goals:

1. Assess the condition of the existing floor framing at the Mertarvik Evacuation Center (MEC).
2. Assess the condition of the Structural Insulated Panels that were delivered to the site by Earthcore SIPs.
3. Document heavy equipment and job site materials present.

Floor Framing

According to the May 2015 study performed by Summit Consulting Services, the MEC foundation and floor system construction was completed in fall 2011. It appears that at that time a sacrificial layer of ¾" CDX plywood sheathing was applied over the completed beam and joist framing to protect them from the elements. A liquid coat of black waterproofing sealant of unknown type was then applied over this floor sheathing to provide additional weather protection to the joists and beams underneath.

The protective decking runs past the structure of the foundation on two sides (the east and west, long dimension) and ends flush with the perimeter Glulam beams on the other two sides (the north and south, short dimension). The decking was unable to be constructed to run past these edges due to the presence of metal porch material. However, the Glulam beams and the steel under the decking do not appear to be degrading. The steel is not exhibiting undo corrosion, and the Glulam beams to not appear to be damaged by water infiltration.

It appears that after 4 years of exposure to the elements, this temporary waterproofing strategy has begun to fail. Currently, the seams at most sheets are allowing rain and snowmelt to wick into the framing underneath. During rainy periods, water is ponding on the floor, and CCHRC Staff observed water running through many of the joints in the sheathing. Wetting has occurred along the tops of the joists and beams, and those areas are starting to show signs of long-term moisture-related discoloration. This ongoing water intrusion is of serious concern, and over a relatively short time it will lead to rot that affects the structural integrity of the floor framing. Therefore, before anything else is done in the development of the building, it is imperative that the existing foundation, beams, and floor joists be protected from the elements as soon as possible. If this is not done, by the time funding has been allocated to finish construction of the building, the floor joists will no longer be usable.

Above: The decking overhangs the long side of the structure, protecting the Glulam beam. On the short side, it ends flush.

Above: Water has begun to infiltrate the temporary decking above the structure. Water can be seen wetting structural members from above.

Above: The sacrificial decking meant to protect the floor is beginning to degrade and let water down in to the structural members

Above: The perimeter Glulam beams and steel columns appear to be in good condition.

Above: Discoloration of structural joist members by water infiltration through the decking.

Earthcore Structural Insulated Panels

According to the calculations in the Summit Report, 570 SIPs were to be shipped to the site. When one crate was opened, and its content extrapolated to the remaining unopened crates, this number was determined to be confirmed. 558 SIPs are necessary to construct the George Watt Design, which would have left twelve extra SIPs in case any were damaged. The SIPs were shipped as blanks, and the design intent was that windows and other openings would be cut on site. However, when the crate was opened to inspect the SIPs in 2012, the 30 SIPs contained in that crate we left to weather and decay. At the time of CCHRC's site visit in 2015, they had degraded to the point that they are no longer usable. According to Summit's calculations, there are now 540 SIPs on site. This would be 18 short of completing the building as designed by George Watt Architects, assuming zero waste and no errors or damaged SIPs once the rest of the crates are opened.

The CCHRC team and NVC conferred and decided that opening all of the remaining crates without a place to store them and protect them from the weather could potentially damage more materials, especially since there is currently no funding or schedule for completing the building. Instead, CCHRC Staff pried one panel of one crate open enough to pull away the Tyvek weather coating inside, inspecting the quality of the OSB SIP, in order to ascertain if any damage or degradation had occurred to the SIPs within the crates themselves. CCHRC Staff observed that the crated SIPs appear to be unaffected by weather since the delivery, and are likely still usable at this time.

Heavy Equipment

At one time, a drill rig, excavator, and crane were present on site and used by various contractors to construct the well, septic, and foundation of the MEC, as well as other facilities at the Mertarvik site. However, all those pieces of heavy equipment have been demobilized and barged out. There are currently two pieces of heavy equipment remaining at the Mertarvik site. A Volvo Michigan L190 Loader is located adjacent to the cargo container yard. This loader is not likely to be useful to the process of finishing construction of the MEC, as there is no dirt work to be done and the foundation has been completed. The loader is damaged, with a flat tire and what appears to be a rear axle out of alignment. A Gradall 534D9-45W Squirt Boom is also present at the Mertarvik site. The squirt boom has a 66" carriage, 36' vertical reach and 9000lbs capacity fully extended. This piece of equipment has keys held by NVC and would be very useful for the completion of the shell structure of the MEC. It would also be necessary in order to move materials from the barge landing to the MEC. At the time of CCHRC's site visit, the squirt boom was not operational. But the local foreman stated that it required only a new battery to be operational.

In addition to the heavy equipment, two job connexes are situated at the site, filled with various tools and files associated with the MEC foundation construction. An inventory of available tools would be helpful, and the connexes could be cleaned up and used for future jobs. Consequently, future contractors will not need to add the mobilization cost of shipping one out to site. Additionally, four small outbuildings are located adjacent to the MEC foundation. They have overhead garage doors and would be beneficial as materials storage during construction.

Above: The crated SIP panels are staged on Durabase mats adjacent to the existing MEC foundation.

Above: A Volvo L190 Loader was left at the Mertarvik Site but is currently damaged.

Above: The SIPs uncrated on a prior site visit were left out in the elements and are no longer usable.

Above: A Volvo L190 Loader was left at the Mertarvik Site but is currently damaged.

Above: the SIPs still within their protective crating appear to be as yet undamaged by the elements and should still be usable.

Above: A Gradall Squirt Boom was left at site and would be useful for continued construction. Keys are present and its battery must be replaced, but was otherwise reported to be in good condition by the local residents

Implications for Retrofit Feasibility

Status of Foundation

The MEC pile foundation is sound. The steel is built to a standard that could accommodate either of the two designs initially pursued, as well as both options posited by Summit Construction. However, the decking is under threat from moisture and exposure to the elements. It is possible that raising funding for the building's completion will take long enough that by the time it arrives, the decking will no longer be usable.

Status of the SIPs

The Structurally Insulated Panels were not constructed to specification and their overall R-value may create a financial liability to the community due to heating costs. Additionally, there are currently 18 SIPs short (assuming zero wastage) of the number necessary to complete the George Watt Design. Although the SIPs that are still crated appear to be in good condition, there are concerns over quality control in the fabrication process. Based on anecdotal conversations with materials suppliers familiar with this particular product line in the state, other panels from this supplier (Earthcore) have been known to warp or contain voids in the insulation. However, they are already at site. Any way that they can be used would mean less materials to be purchased and shipped to complete the building. A method of using the on-site SIPs that adds value to the overall project should be pursued.

Status of Heavy Equipment

The status of heavy equipment is unknown and can add significant cost and logistical constraints to the project. Any construction method that limits the need for heavy equipment should be considered.

State of Funding

The stop-and-start process of design, redesign, mobilization and demobilization of this building thus far has shown that acquiring bulk funding for a project of this size will be a significant challenge. Additionally, the staging of the completion of the building should address its place within the overall staging of relocation. Three homes were constructed too early at Newtok and never occupied, and these unheated homes were rendered uninhabitable due to mold damage before members of the community were able to relocate. For this reason, it is imperative that funding be staged according to sensible stages of construction, in the event that bulk, single-source funding be unobtainable. Additionally, staging the completion of the building will need to consider its place within the overall relocation master plan.

RECOMMENDATIONS

Summary

Prior analyses of the project by others concluded that in order to finish the building, between $5million and $5.4million would need to be raised for construction, plus another $300,000 for design (Summit Report: p.24). This is a difficult amount of money to raise at one time, especially with so many other projects that will need to take place concurrently in the greater relocation effort. Additionally, the original use for the building, as an evacuation center, may no longer be prudent. Instead, a **multi-purpose** space should be emphasized, one that can provide various functions during the relocation effort. In order for the existing foundation and construction materials to contribute to a usable building for the community, a new approach to staging and funding should be pursued that emphasizes three separate stages of completion, to be described in detail in the following section of the report. These three stages are:

1. Protect the foundation
2. Complete the shell
3. Complete the building

Protecting the existing foundation must commence **immediately**, so that no further degradation can occur and no completed work needs to be redone. Acquiring funding and permitting for this stage will be much more attainable than a bulk allocation for a completed building. CCHRC recommends completing this stage concurrently with the upcoming housing construction season, as a local crew can complete the floor protection work without mobilizing a separate contractor.

Completing the shell should occur as its own stage, unless a bulk allocation is available for the completion of the entire building. Completing the shell will further protect the foundation from the elements, can be completed without specialized equipment, and can go through an expedited code review and permitting process. Additionally, the shell can be constructed in such a manner (such as leaving out the interior gypsum sheathing) that it will not be subject to mold and degradation should it be used seasonally or uninhabited for a period after construction. This is a concern, as the planning of the overall relocation may or may not provide for immediate funds to heat and ventilate the shell upon its completion. Additionally, this stage will minimize and streamline design time. The shell can be used as valuable covered storage space for materials involved in future construction projects pertaining to the greater relocation. It can also serve as a protective structure for a temporary, pioneer watering point that utilizes the existing well. The shell structure may be heated with a temporary furnace for periods where it is necessary to the relocation process.

Once the foundation is protected and the shell has been constructed, the completion of the final building can be properly staged with the overall relocation effort. The design hours, program review, and permitting can occur after or during the shell's construction, streamlining the overall building process. In addition to a staged approach to funding and construction, CCHRC recommends a shell structure design that is not overly dependent on heavy equipment, as this has been a logistical issue in the historical process of completing the building. An attempt to modify and supplement Summit Consulting's approach to structural completion with this emphasis is outlined in the next section of this report.

STAGE 1: PROTECT FOUNDATION

Stage 1: Protect the Foundation

This narrative describes possible strategies to preserve the existing foundation and provides a recommendation to better protect the floor until that date when construction can resume.

CCHRC investigated the following options to protect the floor until construction resumes:

1) Liquid Rubberized Asphalt

The least expensive approach would be to apply another layer of liquid rubberized asphalt coating, effectively maintaining the same strategy as was used initially. However, the flooring is already saturated with water and getting the waterproofing to bond to wet plywood is unlikely. More plywood would also need to be ordered. As demonstrated by the first coating, under the best of circumstances with dry plywood, this approach was a quick fix that did not stand the test of time. Although the exact brand is unknown, materials of this type are generally designed to act as a patch to existing roofs or as foundation damp proofing. They are not designed to withstand ponding water when applied to a large flat surface covered in plywood sheathing.

2) 60mil EPDM

EPDM rubber roofing is a good choice for flat wood sheathed surfaces and is commonly used in commercial roofing. Tradesmen are familiar with the product and its application is fairly straightforward. However, it is costly, heavy, and only comes in 20-foot-wide rolls. CCHRC asked for an initial quote from a local distributor and it came to ~$2000 per roll with a total of 4 rolls required to cover the floor. This does not include shipping. Aside from cost, the biggest technical issue would be the overlapping joints of the rolls, which would have to be sealed water tight. This process requires ideal conditions, wherein a crew would need to apply 110 foot runs of volatile seaming glue. This would complicate the installation and further drive up the cost.

3) One-Piece Geomembrane

Geomembranes are often used in containment applications such as oilfield services and mining. They are durable, low temperature-rated, comparatively light, and can be made to size. Alaska Tent & Tarp in Fairbanks quoted a price of $5000 for an approximate 60’ x 110’ membrane to cover the MEC floor. In addition to being made to order, this geomembrane is significantly lighter than EPDM. The data sheet for the specified membrane is included in this section.

It is our recommendation that the floor be covered with Geomembrane before summer 2016. The return of summer temperatures will accelerate the growth of wood fungus. Once the membrane is in place, then the floor can start to dry from underneath. Given the typically wet climate of Nelson Island, it is unknown how long it will take for this to occur. However, it is CCHRC’s conclusion that this strategy is the best hope for saving the structure while the community attempts to raise sufficient funds to finish the construction of the building.

Logistics and Process

The membrane will arrive in one roll that weighs about 750lbs. Ideally, the membrane could be transported from the boat landing to the site using the blue boom forklift that is currently parked nearby. Once the membrane

has been placed on the floor, it will require a crew of 6 people roughly 1-2 days to spread it out and secure it. Currently, the floor sheathing is secured with 16d duplex nails. As these nails stand proud of the subfloor, they will wear through the membrane. Before the membrane is installed, the duplex nails will need to be pulled and the floor plywood will need to be secured with flush-driven regular 10d nails or screws.

An accurate floor measurement will need to be made before ordering the membrane. The membrane should be made large enough such that it hangs over all edges by a foot. Overhanging the membrane will protect the floor and provide secure attachment for 2x4 wind cleats around the perimeter. In addition to wind cleats around the perimeter, enough 2x4 lumber should be on hand to run 6 evenly spaced rows down the length of the floor. Fastening 6 rows of 2x4's in the field will help provide wind uplift resistance to the membrane across the area of the floor. All 2x4's should be fastened with 4" minimum length pan/flat head structural screws. Example brands would include Spax and Headlok:
http://www.spax.us/en/power-lags.html#.Vk-7xWTnv6Y
http://www.fastenmaster.com/products/headlok-heavy-duty-flathead-fastener.html

It is recommended that a separate crew not be specially mobilized for this work, as that will add expense. Instead, CCHRC recommends that the crew already tasked with building housing in the village complete this work concurrently with that project. This saves on mobilization costs, per diem, and demobilization. CCHRC predicts the foundation could be protected by a crew of six over the course of two days, for $9,158.8.

Mertarvik Evacuation Center

The Cold Climate Housing Research Center | December 2015

Platform Protective Sheathing; Material List

QTY	NOTE	COST (EST.)
180ea	2x4x8' (3.79 ea)	$682.20
500ea	4" HeadLOK SPAX or equiv* structural screws ($150/tub)	$300.00
5lbs	2" ceramic coated deck screw	$30.00
10ea	tips for each of the 2 types of screw	$30.00
1ea	Alaska Tent & Tarp Geomembrane 115'x64'	$5500.00

Total Materials Cost (EST.): $6542.20

Above: A materials list for protecting the foundation, with pricing at time of publication

Platform Protective Sheathing; Installation Notes

A: 7x rows of 2x4x8′ cleats at approx. 10′ OC, and 2 shorter rows to cap ends

B: 4″ gap between all 2x4 x 8′ cleats, to allow for drainage

C: Screw pattern as follows

On water-side edge: 24″ o/c
On all other edges: 32″ o/c
In field: 48″ o/c

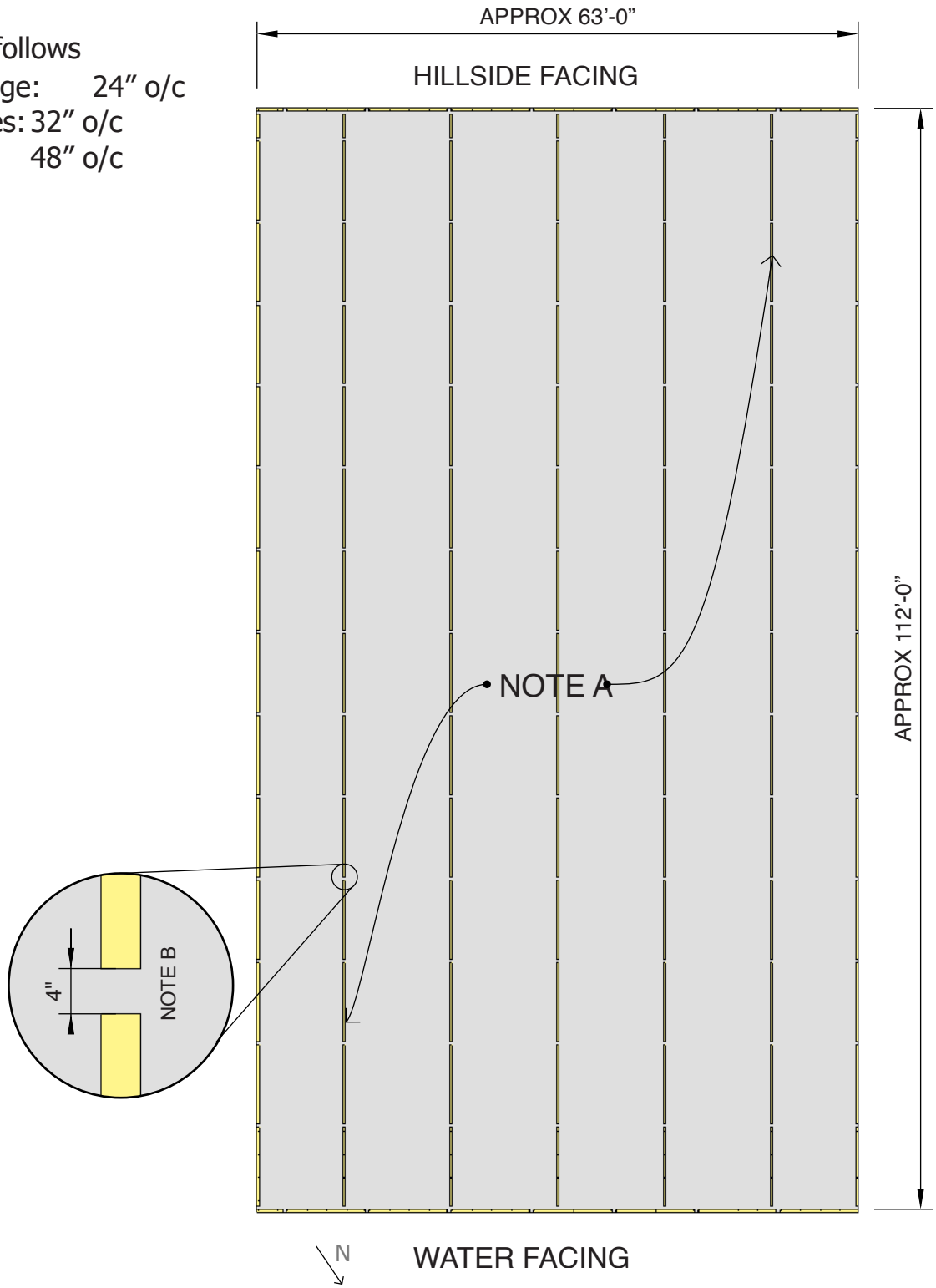

Platform Protective Sheathing; Detail Notes

A: 8218 GeoMembrane laid on top of ¾" plywood

B: Underside cleat, on long edges, to be attached before membrane

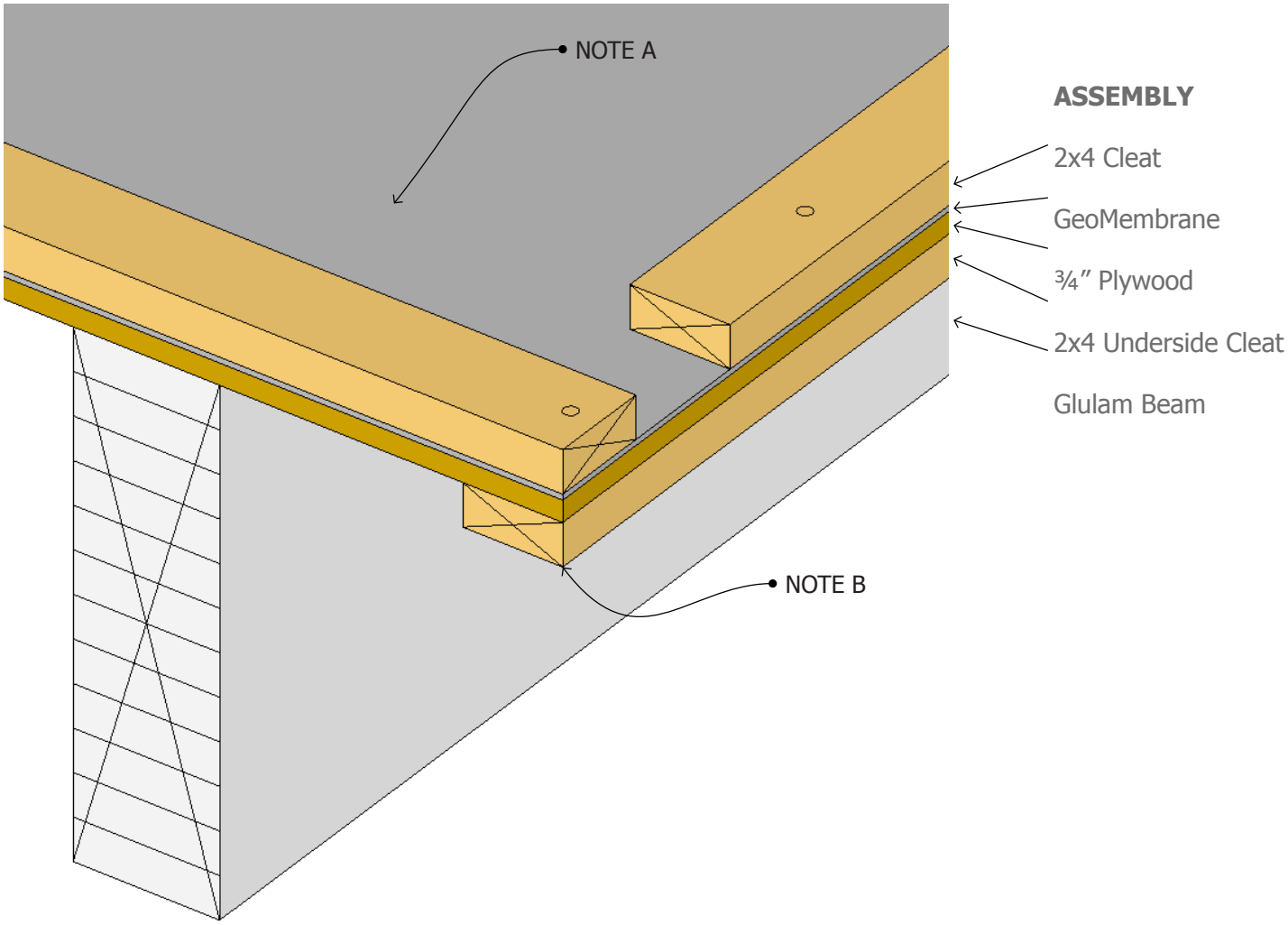

Platform Protective Sheathing; Material List

1ea Alaska Tent & Tarp Geomembrane 115'x64'

8218 LOW TEMPERATURE USE

GEOMEMBRANE SPECIFICATIONS

Seaman Corporation

8218	Standard	Metric
Base Fabric Type Base Fabric Weight (nominal) Coating Type	Polyester 3.0 oz/yd² Flexible PVC	Polyester 102 g/m² Flexible PVC
Finished Coated Weight ASTM D751	18.0 oz/yd² +2/-1 oz/yd²	610 g/m² +70/-35 g/m²
Tongue Tear ASTM D751	8" x 10" sample @ 12 in/min 100/100 lb_f	20.3 cm x 25.4 cm sample @30.5 cm/min 445/445 N
Grab Tensile ASTM D751	230/200 lb_f	1024/890 N
Strip Tensile ASTM D751 Procedure B	200/140 lb_f/in	178/125 daN/5 cm
Adhesion ASTM D751 Dielectric Weld	10 lb_f/in	9 daN/5 cm
Hydrostatic Resistance ASTM D751 Procedure A	200 psi	1.38 MPa
Low Temperature ASTM D2136 1/8" mandrel, 4 hr	Pass -67°F	Pass -55°C
Flame Resistance FTMS 191A Method 5910	Sample not consumed within 2 minutes	Sample not consumed within 2 minutes

Alaska TENT & TARP
alaskatent.com

Chris Gipson
Commercial Project Coordinator

529 Front Street
Fairbanks, AK 99701

Phone (907) 456-6328
Fax (907) 452-5260
chris@alaskatent.com

* **HeadLOK®**
Structural Wood Screw

HeadLOK is a heavy duty structural wood screw that is ideal for many wood applications including deck framing, stair stringers, attaching rigid foam (SIPs), fences, kitchen cabinets and more. The HeadLOK flat head fastener requires no predrilling and offers higher design shear than 3/8" lag screws. The SpiderDrive™ System contains 8 points of contact, maximizing bit fit and reducing stripping. HeadLOK zips right in and creates a great finished look.

- 3/8" lag screw replacement
- No predrilling
- Flat head provides great finished look
- Sharp gimlet point for fast installation into wood and OSB
- Aggressive thread for holding and withdrawal strength
- Free SpiderDrive™ bit in every package

For HeadLOK technical information and drawings, see the Technical Docs section below. For technical documentation of all our structural wood screws, see our Technical Resources page.

STAGE 2: SHELL CONSTRUCTION

Structural Assembly

CCHRC worked with Borjesson Engineering to design a structural system for the building that minimizes materials and shipping costs. The design uses readily available components, and can be constructed strictly with manpower and portable lifting equipment in the event that heavy equipment cannot be mobilized with the available funds. The CCHRC option (Option 3) consists of a post and beam system whereby the roof loads are carried by the exterior walls, and at mid-span and ridge by exposed built-up beams supported by two rows of posts. This approach does require more labor than options 1 and 2 posited by Summit, but it eliminates any large heavy members that would require heavy equipment to set into place.

There are not enough structural insulated panels (SIPs) on site to insulate all exposed parts of the MEC to include the walls, floor, and roof. Even if enough panels were on hand to insulate the structure in it's entirety, the insulative value of one layer of panels would be inadequate. The resulting heating costs would present a financial liability for the Tribe rather than an advantage. Given these circumstances, the existing SIPs will be used in two layers to adequately insulate the roof. Any remaining panels will be used to build the utility room suspended under the floor that houses the mechanical systems. The wall system shall be framed separately. This approach will create the warmest building and still utilize all the materials already delivered to the Mertarvik Site. In addition to this narrative, see Appendix B for drawings and details.

Roof System

This roof design consists of a vented cathedral ceiling with the rafters exposed from below and covered from above with the 4x8 SIPs that are already on site. The rafters are spaced 4' on center to provide support and and attachment for both layers of panels, regardless of orientation. Before the panels can be installed, a thick 10 mil reinforced polyethylene sheeting vapor retarder is to be placed over the rafters. The contractor must verify that the perm rating of the vapor retarder is .06 or less, and that it is rated to withstand several weeks of exposure to sunlight during construction. To attain adequate insulation performance, the roof will use two layers of the 6 $^{3}/_{8}$" SIPs found on site. The two overlapping layers are installed perpendicular to one another to minimize the number of locations where the seams between the panels line up and extend through both layers. All seams between adjoining panels are to be sealed during installation. The evacuation center is situated in a highly exposed location in a cold maritime climate. As a result, the building exterior will be exposed to periods of severe winds and wind-driven rain. The SIP panels currently on site are manufactured using $^{7}/_{16}$" oriented strand board (OSB) sheathing on both faces. History has shown that OSB-faced SIP panels are notoriously vulnerable to moisture damage. Consequently, it is absolutely critical that the roof panels are protected from the weather during construction, and that the roof system is both securely weather proofed and ventilated in order to better survive future moisture intrusion. In designing the roof, CCHRC has followed the current best practices for maritime climates in Alaska (City of Juneau code amended policy on structural on structural panel insulated roofs See Appendix A). The exposed surface of the top layer of SIPs is covered with a breathable waterproofing membrane as the panels are installed. This membrane will help protect panels during construction, and also shield the panels from any moisture that migrates into the roof assembly during the life of the structure. 2x4 sleepers laid at 2' on center, in line with the roof and on top of the membrane covering the SIPS, provide a continuous 1 ½" vented air space from the eaves to the ridge. Both the soffits at the eaves and ridge cap are vented in such a manner as to prevent wind-driven rain from infiltrating the roof assembly at these junctures. A layer of ⅝" CDX plywood sheathing is nailed over the sleepers, followed by a self healing waterproofing membrane and metal roofing. This assembly will provide an R-66 Roof.

Interior Roof System

The exposed rafters in the roof are supported from below using post and beam construction held together with steel brackets and bolted connections. The posts and related bracing will utilize sawn douglas fir timber while the carrying beams that support the rafters are assembled in place over the posts using several layers of laminated veneer lumber (LVL). Two runs of built-up LVL carrying beams are spaced equally across the width of the building, dividing it into thirds, and thereby supporting the rafters at mid span on each side of the roof. The two runs of beams are continuous for the length of the building. The supporting posts are knee-braced where they meet the carrying beams, and each beam run contains 5 evenly spaced posts. The two runs of posts are connected in pairs by a cross beam. In turn, the cross beams carry a short ridge post at mid span, which supports a ridge beam at the peak. The posts are situated directly on top of the existing Glulam foundation beams, which rest on the H-pile structural foundation that is driven into bedrock.

Wall System

As there are insufficient SIPs on site to adequately form the shell of the building, the exterior walls will be framed with 2x6 studs 16″ on center and sheathed on the exterior with ½″ CDX plywood. In order to meet structural engineering requirements, the window arrangements in the gable end walls are such that these walls can still provide adequate resistance to wind loads. The sheathing on all exterior walls will have specified nailing patterns, along with blocking to provide support at all panel edges. To unify the various framing elements, the plywood sheathing must extend above the walls to secure the rim board at the rafter terminations, and below the wall to completely lap over the faces of the supporting Glulam beams. The exterior walls will be insulated using the REMOTE wall system. The REMOTE wall system has been vetted in both Alaska's arctic climates and maritime climates and has proven itself suitable for construction in all regions of Alaska. Instead of relying on interior vapor retarder behind the drywall, the REMOTE wall system locates an air and/or vapor retarder ("exterior membrane") over the sheathing. The bulk of the wall insulation is provided by two 3″ layers of rigid foam board which are applied directly over the exterior membrane. The foam is held in place by vertical 2x4 furring strips using structural screws which pass through the foam board and directly into the studs. Metal siding is then applied over the furring strips. This system has significant advantages in cold maritime climates, all of which contribute to long term building durability. The air spaces between the furring strips are screened but left open at the top and bottom. This provides a vented rain screen behind the metal siding whereby the bulk of any wind-driven rain climates that infiltrates beyond the siding is stopped in the air space. As the space is open, water can drain downwards and air can circulate freely providing a drying path for any moisture, should it accumulate in the exterior of the wall assembly. The 6″ of exterior insulation keeps the framing warm enough that it is at a much reduced risk of attracting condensation. Should a wetting event occur within the framing cavities, the absence of the vapor retarder provides an inward drying path. This assembly will provide a total R-value of R-39. To facilitate ease of construction, CCHRC has developed an in depth manual that covers the materials, concepts, and details entailed by the the REMOTE system. This manual is available for download in PDF format from the CCHRC website: http://www.cchrc.org/sites/default/files/docs/REMOTE_Manual.pdf

Floor System

Indications are that the MEC floor framing, to include carrying beams and joists, was completed in fall of 2011. At that time, a sacrificial layer of ¾″ CDX plywood was nailed over the exposed framing and this plywood layer was covered with what appears to be a thin layer of black roll-applied rubberized asphalt waterproofing. In fall of 2015, CCHRC inspected the floor assembly and it is clear that the temporary weatherproofing has failed and in many areas ponding water on top of the floor is wicking between the seams in the sheathing and wicking into the top flanges of the joists. Although the joists still appear to be sound, many are showing the visible effects of prolonged wetting and an accurate structural assessment will not be possible until the floor sheathing is removed and the top flanges of the joists can be better examined. It is imperative that the floor system be

protected from direct exposure to the elements and further damage. See Stage 1: Protecting the Foundation (pgs 17-18) for CCHRC's recommendations for protecting the floor. Whether the floor is protected with an additional waterproofing membrane or not, it will continue to remain exposed to weather to varying degrees until the building shell is completed. Given the expense associated with replacing damaged floor framing, time is of the essence in regards to completing the MEC enclosure.

Assuming at time of construction that the sacrificial layer ¾ plywood floor sheathing is still sound, then CCHRC advises leaving it in place. This sheathing will provide a working surface during construction and continue to protect the floor until the roof is in place. Once the roof is completed, and both floor joists and beams have sufficiently dried to a wood moisture content of 20% or less, insulating can begin. Given the height of the floor, the sloping ground, and obstacles presented by the pilings, it would be most cost-effective if the bulk of the insulating work could be completed from above. To this end, the underside of the floor should receive a well-sealed air and weather barrier, such as Tyvek Commercial wrap followed by a protective layer of ½" CDX plywood. With the underside of the floor protected and supported, blown-in fiberglass can be installed into the joist bays from above. Blown in dense pack fiberglass is a good choice for this floor system as it is more tolerant of moisture than other products and will fill in voids around the bulky 2x4 parallel chord joists that comprise most of the floor assembly. The existing flooring can be either drilled or removed as needed to install the insulation at the manufacturer-specified density. Once the insulation is in place, the floor can be covered with a fresh layer of ¾" T&G plywood. The plywood should be sealed with caulking at the panel edges to ensure such that it becomes an effective barrier. This floor assembly (16" of blown-in fiberglass) will yield total R-value of R60+.

Mechanical Room

The mechanical room as originally designed by BDS and George Watt takes up significant floorspace in the building and creates staging concerns. The Tribe would like to see the MEC incorporate a watering point for the pioneers in the new community even before the MEC would be completed, and infrastructure is already in place for that approach (see figures below). One solution would be to build the mechanical room for the structure under the floor system. This was the original intent of the 30% Design Analysis Report published in 2009. Given that the pilings are tall, a 14'x20 bay near the sewer and water inflow/outflow service connections can be dedicated to the mech room. The mech room will be 8' tall inside and connected directly to the main floor above. The purpose of the underfloor mechanical room is to keep the bulk of the mechanical systems centralized in a heated and readily serviceable enclosure that is independently accessible. The mechanical room should also be oriented such that it encompasses the water supply and waste lines from above. The mech room floor will be framed inside one of the pile bays by attaching LVL ledger boards between the pilings in the 20' dimension and then hanging joists between the ledger boards. The floor will be sheathed in ¾" T&G plywood and the walls will be framed with 2x6 studs and ½" CDX plywood sheathing. Any remaining SIP panels can be used insulate the exterior walls and floor of the mech room.

Above: A well and septic have already been installed adjacent to the MEC foundation.

SHELL MATERIALS LIST

1	**CCHRC NEWTOK MERTARVIK EMERGENCY SHELTER (MEC) MATERIALS LIST**				
2					
3	UNDERFLOOR FRAMING & INSULATION				
4	FLOOR AREA APPROX 112'X60' = 6720SQFT				
5	UNIT DESCRIPTION	QUANTITY	UNITS	SPECIFICATIONS	NOTES
6	KNAUF JET STREAM BLOWN IN INSULATION/DENSE PACK	650	EA	**INSULATION - FIRST FLOOR** KNAUF JET STREAM ULTRA BLOWN IN FIBERGLASS INSULATION IS RATED TO YIELD APPROXIMATELY R-70 WHEN INSTALLED IN A 16" DEEP JOIST CAVITY AT 1.8LBS/CU FT. COMPARABLE PRODUCTS FROM OTHER MANUFACTURERS MAY HAVE DIFFERENT DENSITIES AND YIELDS AND THE QUANTITIES WILL NEED TO BE ADJUSTED ACCORDING TO MANUFACTURER SPECIFICATIONS. REF: http://www.knaufinsulation.us/en/content/jet-stream-ultra-blowing-wool-insulation-attic-and-cavity-wall-card	To achieve 16" Depth the specs for 7 1/4" dense pack were added to the specs for 9 1/4 dense pack. For 1000 sqft at 1.8lbs/cuft coverage: (7 1/4" = 34 bags) PLUS (9 1/4" = 43.4 bags) = 77.4bags/1000sqft. 77.4bags x 6.720 floor area multiplier = 520bags. Round up to 650 bags.
7	9'X125' TYVEK DRAIN WRAP	7	EA	**UNDERFLOOR AIR BARRIER**	
8	5/8" 4X8 CDX PLYWOOD	230	EA	**UNDERFLOOR SHEATHING**	6720 sqft/32= 210 sheets - round to 230
9					
10	UNDERFLOOR UTILITY ROOM BETWEEN PILINGS 14'x20'x8'				
11	FLOOR AREA APPROX 112'X60' = 6720SQFT				
12	UNIT DESCRIPTION	QUANTITY	UNITS	SPECIFICATIONS	NOTES
13	2x6x16 DF	50	EA	**STUDS & PLATES 16" OC**	68lf wall/16" OC framing = 56 studs@8' = 28ea 2x6x16' PLUS 136lf plates/16' = 9ea 2x6x16' Total = 39 2x6x16' Round to 50ea 2x6x16
14	2x4x20 DF	35	EA	**EXTERIOR WALL FURRING**	56 studs = 56ea 2x4x10' furring strips. = 28 ea 2x4x16' round to 35 ea
15	2x10x20' PRESSURE TREATED	5	EA	**WALL FURRING AT CORNERS.** TREATED GROUND CONTACT RATED	4 exterior corners @ 10' tall x 2ea per corner = 8ea 2x10x10' PT plus 2 extra = 10ea 2x10x10' = 5ea 2x10x20' PT
16	1/2" 4X8 CDX PLYWOOD	25	EA	**WALL SHEATHING**	68lf wall x 9' height (incl joist depth) = 612sqft/32=20 sheets round to 25
17	3/4" 4X8 T&G SUBFLOOR	12	EA	**SUBFLOOR**	14X20 floor = 280sqft/32 = 9 sheets. Round to 12
18	5/8" 4X8 CDX PLYWOOD	12	EA	**UNDERFLOOR SHEATHING**	14X20 floor = 280sqft/32 = 9 sheets. Round to 12
19	16" X 16' I Joists	15	EA	**FLOOR JOISTS** 16" OC BCI SERIES 60 2.0 OR EQUIVALENT	FLOOR JOISTS 20lf /16" OC = 15ea 11 7/8 I joists
20	16" X 1 3/4" x 24' LVL	4	EA	**LEDGER BEAMS FOR JOISTS**	Approx 22'span Doubled up and resting on welded ledgers @ H Piles. 4 ea rounded to 24' long
21	16" X 1 3/4" X 18' LVL	2	EA	**JOISTS UNDER SIDE WALLS**	Approx 14'span Doubled up and resting on welded ledgers @ H Piles. 4 ea rounded to 18' long
22	16" I JOIST HANGERS	30	EA	**JOIST HANGERS** TO FIT JOISTS SPECIFIED IN THIS SECTION	
23	KNAUF JET STREAM BLOWN IN INSULATION/DENSE PACK	35	EA	**FLOOR INSULATION** KNAUF JET STREAM ULTRA BLOWN IN FIBERGLASS INSULATION IS RATED TO YIELD APPROXIMATELY R-70 WHEN INSTALLED IN A 16" DEEP JOIST CAVITY AT 1.8LBS/CU FT. COMPARABLE PRODUCTS FROM OTHER MANUFACTURERS MAY HAVE DIFFERENT DENSITIES AND YIELDS AND THE QUANTITIES WILL NEED TO BE ADJUSTED ACCORDING TO MANUFACTURER SPECIFICATIONS. REF: http://www.knaufinsulation.us/en/content/jet-stream-ultra-blowing-wool-insulation-attic-and-cavity-wall-card	To achieve 16" Depth the specs for 7 1/4" dense pack were added to the specs for 9 1/4 dense pack. For 1000 sqft at 1.8lbs/cuft coverage: (7 1/4" = 34 bags) PLUS (9 1/4" = 43.4 bags) = 77.4bags/1000sqft. 77.4bags x .280 floor area multiplier = 22bags. Round up to 35 bags. NOTE. IF THE CEILING OF THE MECH ROOM IS TO BE UNINSULATED, THEN THIS INSULATION COUNT CAN BE REMOVED AS THE CEILING INSULATION ABOVE CAN BE USED IN THE MECH ROOM FLOOR BELOW INSTEAD.
24	4X8X3" R -TECH 25 PSI FOAM BOARD	50	EA	**FOAM BOARD EXTERIOR WALLS**	612 sqftx2 layers = 1224sqft/32= 39 sheets. Round to 50
25	10" HEADLOK PANEL FASTENER	500	EA	**FURRING SCREWS** NOTE: SCREW POINTS AND THREADS MUST BE THE TYPE THAT PERMITS EASY INSTALL INTO WOOD. REF: http://www.omgroofing.com/browse-by-fastener-name/headlok.html?language=en& SKU - FMHLGM010-250	Screw depth 1 1/2" furring + 6" foam + 5/8 sheathing + 1 1/4 min framing penetration = 9 3/8" = 10" Screw. Screw spacing is 2'OC vertical = 9 screws per 16' wall x 258 studs = 4128pcs PLUS 230pcs gable ends = 4358 round to 5500
26	PROPANEL 2 OR EQUIVALENT PANEL 26 GAUGE	700	SQFT	**METAL SIDING EXTERIOR WALLS**	
27	9'X125' TYVEK DRAIN WRAP	1	EA	**UNDERFLOOR AIR BARRIER**	
28	R-13 FIBERGLASS BATTS UNFACED	544	SQFT	**FIBERGLASS BATTS EXTERIOR WALLS** SIZED TO FIT 16" OC WOOD FRAMING	68lf wall x 8' tall = 544sqft
29	3'-0" EXTERIOR DOOR			**EXTERIOR DOOR** FOR REFERENCE ONLY. DO NOT TALLY. THIS DOOR INCLUDED IN DOOR SECTION	
30					
31	EXTERIOR WALL FRAMING				
32	NOTES: FLOOR AREA APPROX 112'X60' = 344LF EXTERIOR WALL EXTERIOR WALL SURFACE AREA CALC: EAVE WALL HEIGHT INCLUDING FLOOR BEAMS AND RAFTER TAILS = APPROX 16' X 344LF WALL = 5504SQ FT. PLUS 8'X30 GABLE END RECTANGLES (X2 EA) = 480SQFT = 6000SQFT EXTERIOR WALL				
33	UNIT DESCRIPTION	QUANTITY	UNITS	SPECIFICATIONS	NOTES
34	2X6X16' DF	408	EA	**STUD STOCK** TO BE CUT TO LENGTH AS STUDS	344lf exterior wall/16 OC framing = 258 studs PLUS 150 extra for misc framing (trimmers, cripples, sills, etc.) = 408ea 2x6x16'
35	2X6X20' DF	150	EA	**PLATE AND STUD STOCK**	344lf plates x 3 courses = 1032lf/20' = 52ea plates PLUS 148ea extra for longer great room gable end studs and misc framing = 200ea 2x6x20'
36	2x4x16' DF	300	EA	**EXTERIOR WALL FURRING**	Ref 2x6x16' stud count for calcs
37	2X4X20' DF	100	EA	**EXTERIOR WALL FURRING**	Ref 2x6x20' stud count for calcs

38	2x10x20' PRESSURE TREATED	10	EA	**WALL FURRING AT CORNERS**. GROUND CONTACT RATED	4 exterior corners @ 20' long x 2ea per corner = 8ea 2x10x20' Treated wood plus 2 extra
39	1/2" 4'x8' CDX PLYWOOD	237	EA	**EXTERIOR WALL SHEATHING**	Height: 1'-6" tall GLB + 13' eave wall height + 1'-6" to cover rafters = 15' round up to 16', 344lf wall perimeter x 16' tall = 5504sqft/32 = 172 sheets PLUS Gable end rectangles = 3" rise x 30 feet = 90" round up to 8'x30' rectangles 240 sqft (x 2 sides) = 480sqft/32 = 15 sheets Total 187 sheets PLUS 50 extra = 237sheets
40	4X8X 3" R-TECH 15PSI	220	EA	**INNER LAYER OF FOAM**	6000 sqft exterior wall/32 = 188 sheets + 32extra = 220sheets
41	4X8X3" R-TECH 25PSI	220	EA	**OUTER LAYER OF FOAM**	6000 sqft exterior wall/32 = 188 sheets + 32extra = 220sheets
42	9'X125' TYVEK DRAIN WRAP	7	EA	**AIR AND WEATHER BARRIER** NOTE: TYVEK DRAIN WRAP WEATHER BARRIER MUST BE USED AS PART OF THE ENGINEERED DESIGN FOR THIS WALL SYSTEM. APPLIED TO EXISTING WALL SHEATHING BEFORE INSTALLING EXTERIOR FOAM BOARD INSULATION. THIS HOUSE WRAP PROVIDES A DRAINAGE PLANE BEHIND THE EXTERIOR FOAM BOARD INSULATION	6000 sqft exterior wall/1125sqft/roll 6 rolls PLUS 1 extra - 7 rolls
43	10" HEADLOK PANEL FASTENER	5500	EA	**FURRING SCREWS** NOTE: SCREW POINTS AND THREADS MUST BE THE TYPE THAT PERMITS EASY INSTALL INTO WOOD. REF: http://www.omgroofing.com/browse-by-fastener-name/headlok.html?language=en& SKU - FMHLGM010-250	Screw depth based on: 1 1/2" furring + 6" foam + 5/8 sheathing + 1 1/4 min framing penetration = 9 3/8" = 10" Screw. Screw spacing is 2'OC vertical = 9 screws per 16' wall x 258 studs = 4128pcs PLUS 230pcs gable ends = 4358 round to 5500
44	1x8 AZEK FRONTIER TRIM (WOOD GRAIN 1 SIDE)	250	LF	**JAMB SIDES AND TOPS**	13 windows x 11lf/window = 143lf PLUS 4 windows x 15lf/window =60lf = Total 203lf. Round to 250lf
45	1x10 AZEK FRONTIER TRIM (WOOD GRAIN 1 SIDE)	75	LF	**JAMB SILLS**	17 windows x3lf/window = 51lf round to 75lf
46	R-13 FIBERGLASS BATTS UNFACED	5500	SQFT	**WALL CAVITY INSULATION** SIZED TO FIT 16" OC WOOD FRAMING	6000 sqft - (1-6" x 344lf floor beam thickness = 516sqft) =5484sqft - (1' lvl rafter thickness x 344lf = 344sqft) = 5140sqft Round to 5500sqft
47					
48	WALL METAL				
49	UNIT DESCRIPTION	QUANTITY	UNITS	SPECIFICATIONS	NOTES
50	PROPANEL 2 OR EQUIVALENT PANEL 26 GAUGE	6500	SQFT	FOR SIDING EXTERIOR WALLS	
51	¼" HEX DRIVE #9 x 1" WOOD SCREW, or EQUIV. ROOFING FIELD SCREW TYPE W/NEOPRENE SEALING WASHER			130MPH WIND AREA. ESTIMATED QUANTITY, TYPE, AND SIZE TO BE VERIFIED BY SUPPLIER (Steve Lusk?)	
52	¼" HEX DRIVE ¼"-14 x ⅞" STITCH SCREW OR EQUIV.			130MPH WIND AREA. ESTIMATED QUANTITY, TYPE, AND SIZE TO BE VERIFIED BY SUPPLIER (Steve Lusk?)	
53	OUTSIDE CORNER FLASHING	48	lf		16lf x 4 corners =48lf
54	J CHANNEL	1500	lf		344lf floor x 2 runs (top&bottom) = 688lf PLUS 325lf to wrap windows = 1013lf PLUS 68lf to wrap doors = 1081lf Round to 1500lf
55					
56	EXTERIOR DOORS				
57	UNIT DESCRIPTION	QUANTITY	UNITS	SPECIFICATIONS	NOTES
58	EXTERIOR DOORS: PREHUNG INSULATED 3'0"x6'8" STEEL-NFRC RATING R-6 MINIMUM WITH WOOD BUCK/JAMB EXTENSION FOR WALL THICKNESS, WITH BRICKMOLD BALL BEARING CORROSION RESISTANT HINGES	5	EA	INSWING WITH 14 1/4" JAMB EXTENSIONS.	1 1/2 furring + 6" foam +5/8" sheathing + 5 1/2" stud + 5/8" drywall = 14 1/4" Note: the 5th door is to be used for the underfloor utility room.
59	EXTERIOR DOOR THRESHOLD/SILL EXTENSION.	5	EA	3003 BRIGHT TREAD PLATE ALUMINUM OR EQUIV CUT 38" WIDE & BENT 90 DEGREES WITH TOP (SILL) FACE AT 10" AND PERPENDICULAR (SIDING) FACE AT 4". ~3/32 THICKNESS REF: http://www.alascop.com/pdf/al/mill_al.pdf	
60	COMMERCIAL GRADE CORROSION RESISTANT GRADE DOOR HARDWARE.			TO INCLUDE LOCKSETS, STRIKES, DEADBOLTS, AND WEATHERSTRIP	
61					
62	WINDOWS				
63	TRIPLE PANE NORTHERM. ALL WINDOWS TO RECEIVE EXTERIOR AZEK JAMB EXTENSION AND INTERIOR FACTORY BUILT PVC JAMB EXTENSION. 8" INTERIOR PVC JAMB EXTENSION IS FACTORY PRE ASSEMBLED WITH CASING. WINDOW REQUIRES ⅜" INTERIOR RECEIVING CHANNEL AND 5/8" EXTERIOR RECEIVING CHANNEL				
64	UNIT DESCRIPTION	QUANTITY	UNITS	SPECIFICATIONS:	NOTES
65	WINDOW TYPE: OPERABLE CASEMENT/EGRESS (RO: 36"W X 48"H). HINGE: RIGHT HAND OUTSWING (RHOS). WIDTH OF INTERIOR JAMB EXTENSION IS 8"	13	EA		9 ea for gable ends & 4 ea for eave walls office areas.
66	WINDOW TYPE: FIXED CASEMENT (RO: 36"W X 72"H). WIDTH OF INTERIOR JAMB EXTENSION IS 8"	5	EA		upper gable walls
67					
68	INTERIOR PARTION FRAMING & FLOOR SHEATHING				
69	MAIN FLOOR DECK APPROX 112'X60 = 6720 SQFT MEZZANINE DECK APPROX 60'X56' = 3360SQ FT				
70	UNIT DESCRIPTION	QUANTITY	UNITS	SPECIFICATONS	NOTES
71	3/4" T&G PLYWOOD	365	EA	**SUBFLOOR:** MAIN FLOOR & LOFT	SUBFLOOR 6720sqft main floor plus 3360sqft = 10080sqft / 32sqft = 315 sheets PLUS 50 extra = 365 sheets
72	1 1/8" T&G PLYWOOD	5	EA	**STAIR TREADS**	STAIR TREADS 15 treads/stair x 2 stairs = 30 treads PLUS 2 extra = 32 treads @ 3'-6" long. 1 sheet = 8 treads = 4 sheets PLUS 1 extra = 5 sheets
73	PL400 LOCKTITE SUBFLOOR ADHESIVE 28oz., OR EQUIV.	156	EA	**SUBFLOOR ADHESIVE**: LOW VOC RATED FOR WET AND FROZEN LUMBER ref: http://www.loctiteproducts.com/p/pl_ca_400_voc/overview/Loctite-PL-400-VOC-SubFloor-&-Deck-Adhesive.htm	1 tube covers ~ 2.5 sheets. 315sheets/2.5 = 126 tubes Round up to 156 tubes

74	14" x 20' I JOIST	150	EA	**LOFT FLOOR JOISTS** BCI 60 2.0 Series Four star live load deflection limited to L/960 Maximum span is 18'-10"	Sized to span approx 18'-8" between columns. Floor width is 60' /16" OC = 44 joists, excluding rims, to be platform framed for 1 floor bay (x3 floor bays) = 138ea I Joists Plus 12 extra = 150 Ijoists.
75	14" x 20' VERSA LAM RIM BOARD	12	EA	**LOFT FLOOR RIM BOARD** 1 5/16" VERSA-LAM 1.4 1800	56lf eave walls (x2) = 112 lf PLUS 60lf Gable end = 172lf PLUS 40lf shear wall rim = 212lf round to 220 PLUS 1 extra = 240lf
76	14" X 1 3/4" X 20' LVL	32	EA	**BUILT UP HEADERS IN LOFT FLOOR**	For hanging I-Joists between floor bays. LVL headers to be hung off post brackets and resting on exterior walls. 4plys per header (x7 headers including cross ties) = 28ea LVL PLUS 2ea Shear Wall Ledgers = 30ea. Round to 32ea @ 20' long or 16 ea @40' long.
77	11 7/8" x 1 3/4 X 40' LVL	6	EA	**STAIR STRINGERS**	9'-6" rise between floors w/ 7 1/4" x 11" stairs = 7 7/8"/12 stair pitch. Stringer diagonal length = approx 18' Round to 20'. 3 stringers per stair x 2 stairs = 6 LVL PLUS 2 extra = 8 LVL @ 20' or 4 LVL @ 40'
78	14" top flange joist hangers.	276	EA	**JOIST HANGERS** To fit 14" BCI 60 2.0 Series	Gable end bay = 44 hangers PLUS 88 hangers middle bay PLUS 58 hangers shear wall bay = 190 hangers PLUS 30 extra = 220 hangers Note; To meet structural requirements, shear wall is to support joists via platform framing NOT by hanging joists from a ledger nailed to the shear wall.
79	50lbs 8D 1½" HDG JOIST HANGER NAILS			**HANGER NAILS**	
80	2x4x16' DF	350	EA	**INTERIOR WALL FRAMING**	500lf partition wall on first floor / 16" OC Framing = 375 8' studs/ 2 =188 2x4x16 =PLUS 1000lf plates/16' = 63 2x4x16 = 251 2x4x16 PLUS 99 extra = 350 2x4x16
81	2X6X16' DF	100	EA	**SHEAR WALL STUDS**	60lf/16" OC = 45ea 2x6x16' PLUS 55 ea misc partition wall framing
82	1/2" 4'x8' CDX PLYWOOD	60	EA	**SHEAR WALL SHEATHING**	From bottom of floor beam to top of rafter: 20'x20' = 400sqft (x2sides) = 800sqft (x2 walls) = 1600sqft/32 = 50 sheets + 10 extra = 60 sheets.
83					
84	POST & BEAM FRAMING				
85	UNIT DESCRIPTION	QUANTITY	UNITS	SPECIFICATONS	NOTES:
86	11 7/8" X 1 3/4" X 40' LVL	6	EA	**BUILT UP RIDGE BEAM.**	6 sections @ 18'-8" = 3 sections at 38' (x2 plies) = 6ea 40' LVL
87	11 7/8" X 1 3/4" X 40' LVL	24	EA	**BUILT UP CARRYING BEAMS FOR RAFTERS.**	6 sections @ 18'-8" = 3 sections at 38' (x4 plies per beam) = 12ea 40' LVL (x2 beams) = 24ea 40' LVL
88	11 7/8" X 1 3/4" X 40' LVL	3	EA	**RAFTER TAIL RIM BOARD**	112 lf of rim board to catch rafter tails round to 120lf
89	11 7/8" X 1 3/4" x 40' LVL	6	EA	**EXTRA**	Extra
90	11 7/8" X 1 3/4" X 40' LVL	10	EA	**CROSS TIES**	20' span (x4 plies per tie) (x5 ties) = 20ea @20' or 10 ea @40'
91	11 7/8" X 1 3/4" x 32' LVL	125	EA	**RAFTERS**	32' long. 112lf /4' OC spacing = 29 rafters (x2sides)= 58 rafters PLUS 2 additional to triple over shear wall = 60 rafters (x 2plies) = 120 rafters Plus 5 extra = 125 rafters
92	16" x 1 3/4" X 20' LVL	6	EA	**SHEAR WALL FLOOR BEAMS.**	20' span (x3 plies per beam) (x 2 beams) = 6ea@20'
93	8X8X16' DF TIMBER # 2 OR BETTER	30	EA	**POSTS.**	10ea@ 16' PLUS 20ea knee braces at 6' = 10ea@ 16' PLUS 5 ea king posts at 4' = 2ea@ 16' = 22ea@ 16' PLUS 8 extra = 30ea@ 16'
94	VARIETY OF BEAM BRACKETS			TO BE SOURCED & PRICED BY CCHRC	
95	BOLTS, NUTS, WASHERS			TO BE SOURCED & PRICED BY CCHRC	
96	SEISMIC ANCHORS & HARDWARE			TO BE SOURCED & PRICED BY CCHRC	
97					
98	ROOF SYSTEM				
99	4X8 SIP PANEL COUNT CALC: (Roof 1 side 3/12 pitch: 32'x114' = 3648sqft) x (2 sides =7296sqft) x (2 layers) = 14592 sqft/32 = 456 panels				
100	UNIT DESCRIPTION	QUANTITY	UNITS	SPECIFICATONS	NOTES
101	STRAND REINFORCED POLYETHYLENE SHEETING	3	ROLLS	**CEILING VAPOR RETARDER** DURA-SKRIM 10MIL 100'X40' OR EQUIV. MUST MEET VAPOR PERM OF .O6 OR LESS REF:http://ravenefd.com/products/product-data-sheets	
102	TREMCO ACCOUSTICAL SEALANT	500	TUBES	**TREMCO VB SEALANT** 1 QUART (LARGE SIZE TUBES) REF: http://www.tremcosealants.com/products/acoustical-curtainwall-sealant.aspx	TO SEAL VAPOR RETARDER LAPS: 56 rafter bays @ (4'x 30')(x2) = 240lf/bay x 56 bays = 13440lf/27lf coverage per cartridge = 500 tubes
103	9" HEADLOK PANEL FASTENER	3750	EA	**STRUCTURAL SCREWS FIRST LAYER SIPS** NOTE: SCREW POINTS AND THREADS MUST BE THE TYPE THAT PERMITS EASY INSTALL INTO WOOD. REF: http://www.omgroofing.com/browse-by-fastener-name/headlok.html?language=en& SKU - FMHLGM009-250	15 screws per panel x 250 panels = 3750pcs
104	16" HEADLOK PANEL FASTENER	3750	EA	**STRUCTURAL SCREWS SECOND LAYER SIPS** NOTE: SCREW POINTS AND THREADS MUST BE THE TYPE THAT PERMITS EASY INSTALL INTO WOOD. REF: http://www.omgroofing.com/browse-by-fastener-name/headlok.html?language=en& SKU - FMHLGM016-250	15 screws per panel x 250 panels = 3750pcs
105	4" HEADLOK PANEL FASTENER	2500	EA	**ROOF VENT FURRING SCREWS** NOTE: SCREW POINTS AND THREADS MUST BE THE TYPE THAT PERMITS EASY INSTALL INTO WOOD.	To attach 2x4 roof vent strips
106	11" HEADLOK PANEL FASTENER	2500	EA	**ROOF VENT FURRING SCREWS** NOTE: SCREW POINTS AND THREADS MUST BE THE TYPE THAT PERMITS EASY INSTALL INTO WOOD.	To attach 2x4 roof vent strips
107	WATERPROOF VAPOR PERMEABLE SELF ADHERING ROOFING UNDERLAYMENT	22	ROLLS	**WEATHERPROOFING MEMBRANE OVER SIPS** CARLISLEFire Resist 705 VP Full Rolls 48" X 100' roll, 1 rolls/box REF: https://www.carlisleccw.com/?page=view&mode=media&contentID=4782&frompage=search&children=true&fromcategory=286&frommediatype=literature&fromdoctype=4	TO BE INSTALLED OVER THE OSB SIP PANELS AS A VAPOR PERMEABLE (10 PERMS) MEMBRANE TO PROTECT THE PANELS FROM EXPOSURE TO WEATHER DURING INSTALLATION AND TO PROVIDE A SECONDARY BREATHABLE WATERPROOF PROTECTIVE LAYER FOR THE OSB AFTER THE ROOF IS COMPLETED. NOTE: TEMPERATURE SENSITIVE. 2X4 FURRING STRIPS TO BE FASTENED THROUGH THIS UNDERLAYMENT. 7296sqft, round up to 8000sqft/480sqft/roll = 17 rolls Round to 22

108	CONTACT ADHESIVE FOR ROOFING UNDERLAYMENT	50	GALLONS	**WATER BASE PRIMER** CARLISLE CCW 702-WB PRIMER. 200SQFT/GAL COVERAGE OVER OSB. REF: https://www.carlisleccw.com/?page=view&mode=media&contentID=2766&frompage=search&children=true&fromcategory=26&frommediatype=literature&fromdoctype=4	WATER BASED PRIMER FOR FIRE RESIST 705 VP. NOTE: TEMPERATURE SENSITIVE. 8000 sqft of roof/ 200sqft/gal = 40 gallons. Round to 50 gals
109	LAP SEALANT	25	TUBES	**LAP SEALANT** CARLISLE SURE-SEAL LAP SEALANT 22LF COVERAGE PER TUBE REF: https://www.carlisleccw.com/?page=view&mode=media&contentID=2748&frompage=search&fromcategory=60&frommediatype=literature&fromdoctype=4	To seal cut edges, reverse laps, etc. on the Fire resist 705 VP
110	WATERPROOF VAPOR IMPERMEABLE SELF-ADHERING ROOFING UNDERLAYMENT	50	ROLLS	**WEATHERPROOFING MEMBRANE OVER ROOF PLYWOOD** CARLISLE WIP 300 HT SELF ADHERING ROOFING UNDERLAYMENT 3'X66' ROLL REF: http://www.carlislewipproducts.com/_docs/WIP%20300HT%20Sell%20Sheet.pdf	PRIMARY WEATHER BARRIER ABOVE THE VENTED SPACE, BETWEEN THE METAL ROOFING AND 5/8 CDX ROOF SHEATHING. NOTE: TEMPERATURE SENSITIVE. MAY NOT REQUIRE PRIMER - SEE MFG SPECIFICATIONS. 8000sqft/198sqf/roll = 40 rolls. Round to 50 rolls
111	2X6X16' DF	750	EA	**LUMBER TO WRAP EACH 4X8 SIP PANEL PERIMETER**	Use to wrap 4x8 SIP panel blanks on all 4 sides. 24lf/panel x 456 panels = 10944lf/16' = 684ea 2x6x16' plus 66 extra = 750ea
112	2x4x16 DF	320	EA	**ROOF VENTING FURRING STRIPS**	1 side @ 2' OC = 114lf/2 = 58 runs (x2 sides) = 116 runs @ 34' long 1 run requires 2 ea 2x4x16' Total = (116runs x 2pcs) = 232 2x4x16' PLUS Eave and ridge runs = (114x4) = 456lf/16= 29ea 2x4x16' Total 261 2x4x16' Plus 59 extra = 320ea 2x4x16'
113	5/8" CDX PLYWOOD SHEATHING	250	EA	**ROOF SHEATHING**	7296sqft roof area/ 32 = 228 sheets. Round to 250pcs
114					
115	ROOF METAL				
116	UNIT DESCRIPTION	TOTAL	UNITS	SPECIFICATONS	NOTES
117	STANDING SEAM METAL ROOFING	8000	SQ FT	METAL SALES "IMAGE 2" OR ASC "SKYLINE" MUST BE ABLE TO WITHSTAND 130MPH WIND GUSTS. ROOF SIDES ARE APPROX 32' FEET LONG X 114 WIDE. CONSEQUENTLY PANELS WILL BE ~32' FEET LONG FROM EAVE TO RIDGE.	
118	FASTENERS FOR METAL ROOFING			130 MPH WIND FASTENING. QUANTITY AND SIZE TBD BY SUPPLIER (Steve Lusk?)	NOTE: Roof metal to be fastened into 5/8" CDX plywood sheathing.
119	EAVE FASCIA	228	LF	TO COVER A 2X8 VERTICAL FASCIA BOARD	
120	GABLE FASCIA	128	LF	TO COVER A 2X8 VERTICAL FASCIA BOARD	32lf x 4 gables = 128lf
121	VENTED RIDGE CAP	114	LF		
122	COMMERCIAL GRADE METAL GUTTERS AND RELATED HARDWARE	228	LF	MUST BE DURABLE FOR BETHEL COASTAL REGION	
123	200 LF DOWN SPOUT				
124	SNOW STOPS	1500	LF	COMPATIBLE WITH STANDING SEAM ROOFING	6 runs per side x 2 sides = 12 runs x 114lf = 1368lf
125					

Notes on the Materials List

This materials list is based off the plans created by CCHRC and Borjesson Engineering. It is not an exhaustive list, and should be considered at 85% completion. Contractors bidding on the completion of the shell will need to factor in materials that are not on this list, including but not limited to: fasteners, flashings, and details pertaining to the heating equipment. Contractors will note that internal sheathing (GWB) has not been included, in case the building shell is left unheated before occupation. Mold will grow inside the structure if this is the case. GWB should not be included in the materials package unless the building will be continuously heated upon construction completion of Stage 2.

SHELL MATERIALS/LABOR COST

Shell Completion

CCHRC worked with Spenard Builder Supply's Rural Sales Office to cost out the materials and shipping for the completion of the shell. SBS is an Alaska-based company with wide experience in rural Alaska construction projects. The following materials cost estimate is dated **January 13th, 2016**. Costs are subject to change over time, and may be different depending on when the project is completed. This cost estimate is not an official bid, but a method of predicting costs for fundraising efforts to complete the building. Project managers are encouraged to use best-practice formulas for adding inflation and other costs to the estimate as more time passes after the publication of this report.

Spenard Builders Supply
PRO Build

SBS - LOIS DRIVE
4412 LOIS DR.
ANCHORAGE, AK 99517
(907)563-3141

****
* ESTIMATE *
****

NUMBER: 7552509 CHANGE
DATE: 1/06/2016 PAGE: 1
10:14 AM

ACCOUNT: 20-00050020-000

SOLD TO: CASH SPECIAL ORDER-LOIS DR

SHIP TO: 450-1742 ILYA BENESCH
CCHRC
METARVIK EVACUATION BLDG
NEWTOK,AK

SELLING STORE	20	SHIPPING STORE	20	SALES PERSON	1632 STEVE LUSK	OUR ORDER NO.	7552509-00
CUSTOMER P.O.				TERMS	CASH		

QUANTITY ORDERED	QUANTITY SHIPPED	U/M	ITEM	DESCRIPTION		UNIT PRICE	EXTENDED PRICE
				.			
				*** UNDERFLOOR FRAME/INSUL ***			
650		EA	IMKJSU	JET-STREAM ULTRA BLOW IN INSUL	650EA	38.694	25,151.10
				SHIP: 0060			
7		EA	33509125	9'X125' TYVEK ***DRAIN WRAP***	7EA	194.86	1,364.02
				WHITE			
230		EA	CDX58	5/8" (19/32) CDX PLYWOOD	230EA	21.928	5,043.44
				.			
				*** UNDERFLOOR BETWEEN PILE***			
50		EA	2HF20616	2X6 16FT HEM FIR DRIED #2&BTR	.8MBF	668.00	534.40
35		EA	2HF20420	2X4 20FT HEM FIR DRIED #2&BTR	.467MBF	600.00	280.14
5		EA	AWW21020	2X10 20FT KD S4S AWWF	.167MBF	1142.00	190.37
25		EA	CDX12	1/2" (15/32) CDX PLYWOOD (66)	25EA	17.86	446.50
12		EA	UND34	3/4"(23/32)T&G P&TS UL PLYWOOD	12EA	29.52	354.24
12		EA	CDX58	5/8" (19/32) CDX PLYWOOD	12EA	21.928	263.14
8		EA	BCI1632	BCI 60 16X32FT JOIST	8EA	136.91	1,095.28

NET SALE	TAX SALE	TAX %	TAX	TOTAL
				CONTINUED

Spenard Builders Supply
PRO Build

SBS - LOIS DRIVE
4412 LOIS DR.
ANCHORAGE, AK 99517
(907)563-3141

****
* ESTIMATE *
****

NUMBER: 7552509 CHANGE
DATE: 1/06/2016 PAGE: 2
10:14 AM

ACCOUNT: 20-00050020-000

SOLD TO: CASH SPECIAL ORDER-LOIS DR

SHIP TO: 450-1742 ILYA BENESCH
CCHRC
METARVIK EVACUATION BLDG
NEWTOK,AK

SELLING STORE 20 SHIPPING STORE 20 SALES PERSON 1632 STEVE LUSK OUR ORDER NO. 7552509-00

CUSTOMER P.O. TERMS CASH

QUANTITY ORDERED	QUANTITY SHIPPED	U/M	ITEM	DESCRIPTION		UNIT PRICE	EXTENDED PRICE
132		LF	BCI16V	1-3/4 X 16" VERSALAM SHIP: 0530 2/18' 4/24'	132LF	8.51	1,123.32
30		EA	SIMMIT3516	MIT3516 TJI/35X16 T/F HANGER	30EA	9.833	294.99
35		EA	IMKJSU	JET-STREAM ULTRA BLOW IN INSUL SHIP: 0060	35EA	38.694	1,354.29
50		EA	3299	3" 4X8 25PSI R-TECH	50EA	49.765	2,488.25
1		EA	ROFRSRG10	10" HD ROOF SCREW 500CT OLYMPI SHIP: 0170	1EA	363.99	363.99
700		EA	3399	26GA NORCLAD PANEL - PER SQFT -	700EA	1.328	929.60
1		EA	33509125	9'X125' TYVEK ***DRAIN WRAP*** WHITE	1EA	194.86	194.86
5		EA	IFK1315VAK	B65VAK R13 3.5X15 116.25SF UNF SHIP: 0060 .	5EA	57.20	286.00

NET SALE	TAX SALE	TAX %	TAX	TOTAL
				CONTINUED

SELLING STORE 20 SHIPPING STORE 20 SALES PERSON 1632 STEVE LUSK OUR ORDER NO. 7552509-00

CUSTOMER P.O. TERMS CASH

QUANTITY ORDERED	QUANTITY SHIPPED	U/M	ITEM	DESCRIPTION		UNIT PRICE	EXTENDED PRICE
				*** EXT WALL FRAMING ***			
408		EA	2HF20616	2X6 16FT HEM FIR DRIED #2&BTR	6.528MBF	668.00	4,360.70
150		EA	2HF20620	2X6 20FT HEM FIR DRIED #2&BTR	3MBF	616.00	1,848.00
300		EA	2HF20416	2X4 16FT HEM FIR DRIED #2&BTR	3.202MBF	652.00	2,087.44
10		EA	AWW21020	2X10 20FT KD S4S AWWF	.333MBF	1142.00	380.74
237		EA	CDX12	1/2" (15/32) CDX PLYWOOD (66)	237EA	17.86	4,232.82
220		EA	3299	3" 4X8 15PSI R-TECH	220EA	45.90	10,098.00
220		EA	3299	3" 4X8 25PSI R-TECH	220EA	49.765	10,948.30
7		EA	33509125	9'X125' TYVEK ***DRAIN WRAP*** WHITE	7EA	194.86	1,364.02
11		EA	ROFRSRG10	10" HD ROOF SCREW 500CT OLYMPI SHIP: 0170	11EA	363.99	4,003.89
25		EA	08909372	AZ10810 1X8X10' AZEK TRIMBOARD	25EA	48.42	1,210.50
4		EA	08911018	AZ11018 1X10X18' AZEK TRIM BOA SHIP: 0030	4EA	111.45	445.80
47		EA	IFK1315VAK	B65VAK R13 3.5X15 116.25SF UNF SHIP: 0060	47EA	57.20	2,688.40

NET SALE	TAX SALE	TAX %	TAX	TOTAL

CONTINUED

Spenard Builders Supply
PRO Build

SBS - LOIS DRIVE
4412 LOIS DR.
ANCHORAGE, AK 99517
(907)563-3141

********** * ESTIMATE * **********

NUMBER: 7552509 CHANGE
DATE: 1/06/2016 PAGE: 4
10:14 AM

ACCOUNT: 20-00050020-000

SOLD TO: CASH SPECIAL ORDER-LOIS DR

SHIP TO: 450-1742 ILYA BENESCH
CCHRC
METARVIK EVACUATION BLDG
NEWTOK,AK

SELLING STORE 20 SHIPPING STORE 20 SALES PERSON 1632 STEVE LUSK OUR ORDER NO. 7552509-00

CUSTOMER P.O. TERMS CASH

QUANTITY ORDERED	QUANTITY SHIPPED	U/M	ITEM	DESCRIPTION		UNIT PRICE	EXTENDED PRICE
				.			
				*** WALL METAL ***			
6500		EA	3399	26GA NORCLAD PANEL	6500EA	1.328	8,632.00
27		BG	RMSSCR1P	% #10 9X1" SCREW PAINTED	27BG	25.55	689.85
				114 PER LB/250 PER BAG/2.20#BG			
9		BG	RMSSCR34P	%12X3/4" STITCH SCREW PAINTED	9BG	38.78	349.02
				108 PER LB/250 PER BAG/2.3#BAG			
5		EA	SPC073205950380	OC-2 OUTSIDE CORNER FLASHING	5EA	18.79	93.95
150		EA	SPC073205950360	C-1 29GA C-METAL FLASHING	150EA	11.14	1,671.00
				.			
				*** EXTERIOR DOORS ***			
5		EA	DTG075525090035	3-0 9-1/4 IS FG TEXT DOOR	5EA	419.97	2,099.85
				FLUSH			
				**ADD-ON DRILL FOR DEAD BOLT			
				**14-1/4 JAMB PRIMED			
				**BRICKMOLD PRIMED			

NET SALE	TAX SALE	TAX %	TAX	TOTAL
				CONTINUED

SELLING STORE 20 SHIPPING STORE 20 SALES PERSON 1632 STEVE LUSK OUR ORDER NO. 7552509-00

CUSTOMER P.O. TERMS CASH

QUANTITY ORDERED	QUANTITY SHIPPED	U/M	ITEM	DESCRIPTION		UNIT PRICE	EXTENDED PRICE
				**4X4 HINGE 5/8 26D NRP BB			
				**MILL FINISH ADJ Z-SILL			
5		EA	3399	10"X4" 24GA DOOR SILL EXTENDER	5EA	31.22	156.10
5		EA	17323028	QCL250 PNN ENTRY LEVER 626	5EA	92.69	463.45
				QCL250PNN 626 KD 234DS 4			
				SHIP: 0023			
5		EA	17362623	QDB180 K2 DEADBOLT 626	5EA	63.93	319.65
				QDB180CR 626 KD 234BS			
				SHIP: 0023			
				.			
				*** WINDOWS ***			
13		EA	1399	3/0X4/0 TRPL PANE CASE-PER SPE	13EA	651.12	8,464.56
5		EA	1399	3/0X6/0 TRPL PANE PIC-PER SPEC	5EA	450.88	2,254.40
6		EA	1399	CRATING FOR ABOVE WINDOWS	6EA	105.00	630.00
				.			
				*** INT PARTION FRAMING ***			

NET SALE	TAX SALE	TAX %	TAX	TOTAL
				CONTINUED

Spenard Builders Supply
PRO2build

SBS - LOIS DRIVE
4412 LOIS DR.
ANCHORAGE, AK 99517
(907)563-3141

****
* ESTIMATE *
****

NUMBER: 7552509 CHANGE
DATE: 1/06/2016 PAGE: 6
10:14 AM

ACCOUNT: 20-00050020-000

SOLD TO: CASH SPECIAL ORDER-LOIS DR

SHIP TO: 450-1742 ILYA BENESCH
CCHRC
METARVIK EVACUATION BLDG
NEWTOK,AK

SELLING STORE 20 SHIPPING STORE 20 SALES PERSON 1632 STEVE LUSK OUR ORDER NO. 7552509-00

CUSTOMER P.O. TERMS CASH

QUANTITY ORDERED	QUANTITY SHIPPED	U/M	ITEM	DESCRIPTION		UNIT PRICE	EXTENDED PRICE
365		EA	UND34	3/4"(23/32)T&G P&TS UL PLYWOOD	365EA	29.52	10,774.80
5		EA	UND241	1-1/8" 2-4-1 T&G PLYWOOD	5EA	47.76	238.80
156		EA	6771158	PL400 28OZ H/D SUBFLOOR ADHESI	156EA	5.837	910.57
3000		LF	BCI14	BCI 60 14"XR/L JOIST	3000LF	3.665	10,995.00
				SHIP: 0027			
				150/20'			
12		EA	BCI117820VRL	1-5/16"X11-7/8" 20FT VERSA RIM	12EA	76.30	915.60
640		LF	BCI14V	1-3/4 X 14" VERSALAM	640LF	6.88	4,403.20
				SHIP: 0530			
				32/20'			
240		LF	BCI1178V	1-3/4X11-7/8" VERSALAM	240LF	5.42	1,300.80
				SHIP: 0530			
				6/40'			
276		EA	SIMMIT3514	MIT3514 TJI/35X14 T/F HANGER	276EA	7.977	2,201.65
1		BX	NLS112HDJH	%1-1/2" HOT DIP GALV JST HNG N	1BX	135.89	135.89
350		EA	2HF20416	2X4 16FT HEM FIR DRIED #2&BTR	3.735MBF	652.00	2,435.35

NET SALE	TAX SALE	TAX %	TAX	TOTAL
				CONTINUED

SELLING STORE 20 SHIPPING STORE 20 SALES PERSON 1632 STEVE LUSK OUR ORDER NO. 7552509-00

CUSTOMER P.O. TERMS CASH

QUANTITY ORDERED	QUANTITY SHIPPED	U/M	ITEM	DESCRIPTION		UNIT PRICE	EXTENDED PRICE
100		EA	2HF20616	2X6 16FT HEM FIR DRIED #2&BTR	1.6MBF	668.00	1,068.80
60		EA	CDX12	1/2" (15/32) CDX PLYWOOD (66)	60EA	17.86	1,071.60
				.			
				*** POST & BEAM FRAMING ***			
5960		LF	BCI1178V	1-3/4X11-7/8" VERSALAM	5960LF	5.42	32,303.20
				SHIP: 0530			
				49/40'			
120		LF	BCI16V	1-3/4 X 16" VERSALAM	120LF	8.51	1,021.20
				SHIP: 0530			
				6/20'			
30		EA	2GF80816	8X8 16FT GREEN STD & BTR FIR	2.56MBF	1934.00	4,950.73
				.			
				*** ROOF SYSTEM ***			
3		EA	IPR40100CL	40'X100' REINFORCED POLY	3EA	254.55	763.65
500		EA	164040	TREMCO ACOUSTICAL SEALANT	500EA	8.734	4,367.00
8		EA	ROFRSRG10	10" HD ROOF SCREW 500CT OLYMPI	8EA	363.99	2,911.92
				SHIP: 0170			

NET SALE	TAX SALE	TAX %	TAX	TOTAL

CONTINUED

Spenard Builders Supply
PRO Build

SBS - LOIS DRIVE
4412 LOIS DR.
ANCHORAGE, AK 99517
(907)563-3141

****
* ESTIMATE *
****

NUMBER: 7552509 CHANGE
DATE: 1/06/2016 PAGE: 8
10:14 AM

ACCOUNT: 20-00050020-000

SOLD TO: CASH SPECIAL ORDER-LOIS DR

SHIP TO: 450-1742 ILYA BENESCH
CCHRC
METARVIK EVACUATION BLDG
NEWTOK,AK

SELLING STORE 20 SHIPPING STORE 20 SALES PERSON 1632 STEVE LUSK OUR ORDER NO. 7552509-00

CUSTOMER P.O. TERMS CASH

QUANTITY ORDERED	QUANTITY SHIPPED	U/M	ITEM	DESCRIPTION		UNIT PRICE	EXTENDED PRICE
15		BX	ROF16S	16" OLYMPIC ROOF SCREW CRH16 250 PER BOX SHIP: 0060	15BX	350.45	5,256.75
10		BX	ROF4SIP	%4" HEADLOK FASTENER 250 CT BOX SHIP: 0110	10BX	117.32	1,173.20
10		BX	ROF11S	11" OLYMPIC ROOF SCREW #CRH11 / 500 CT BOX SHIP: 0060	10BX	356.89	3,568.90
22		RL	SPC075525090602	CCW 705VP 4'X100' UNDERLAYMENT	22RL	364.28	8,014.16
10		EA	SPC075525090603	CCW 702WB PRIMER - 5 GAL	10EA	263.11	2,631.10
25		EA	CCWLM800XL	LM-800XL 29OZ LIQUID MASTIC COVERAGE RATE @ 3/4" FILL = 30' PER 29OZ TUBE FAST DRYING - COLD APPLIED 12 PER BOX SHIP: 0060	25EA	15.71	392.75

NET SALE	TAX SALE	TAX %	TAX	TOTAL

CONTINUED

SELLING STORE 20 SHIPPING STORE 20 SALES PERSON 1632 STEVE LUSK OUR ORDER NO. 7552509-00

CUSTOMER P.O. TERMS CASH

QUANTITY ORDERED	QUANTITY SHIPPED	U/M	ITEM	DESCRIPTION		UNIT PRICE	EXTENDED PRICE
50		EA	CCWWIP300HT	WIP-300HT BLK 36"X67" 200SF SHIP: 0060	50EA	115.40	5,770.00
750		EA	2HF20616	2X6 16FT HEM FIR DRIED #2&BTR	12MBF	668.00	8,016.00
320		EA	2HF20416	2X4 16FT HEM FIR DRIED #2&BTR	3.415MBF	652.00	2,226.61
250		EA	CDX58	5/8" (19/32) CDX PLYWOOD . *** ROOF METAL ***	250EA	22.72	5,680.00
8000		SF	SPC075525090670	26GA SUPER SPAN ROOFING	8000SF	1.69	13,520.00
85		BG	SPC072991260020	#14X1 WOODGRIP SCREW - PAINTED	85BG	12.96	1,101.60
30		BG	SPC075525090690	LS14X7/8 STITCH SCREW	30BG	11.49	344.70
37		EA	SPC073278910480	SPECIAL FACIA FLASHING 10'-6"	37EA	16.52	611.24
13		EA	SPC072991260050	G4 GABLE FLASHING - PAINTED	13EA	22.82	296.66
24		EA	SPC072991260060	ER2 EAVE FLASHING - PAINTED	24EA	19.32	463.68
12		EA	SPC075525090725	24GA HIGH WIND RIDGE VENT	12EA	181.19	2,174.28
2		EA	SPC072991260100	EXPORT CRATING-TRIMS/FLASHINGS	2EA	49.34	98.68
64		LF	SPC072991260110	EXPORT CRATE -ROOFING PER L/F	64LF	8.58	549.12

NET SALE	TAX SALE	TAX %	TAX	TOTAL
				CONTINUED

Spenard Builders Supply
PRO Build

SBS - LOIS DRIVE
4412 LOIS DR.
ANCHORAGE, AK 99517
(907)563-3141

****
* ESTIMATE *
****

NUMBER: 7552509 CHANGE
DATE: 1/06/2016 PAGE: 10
10:14 AM

ACCOUNT: 20-00050020-000

SOLD TO: CASH SPECIAL ORDER-LOIS DR

SHIP TO: 450-1742 ILYA BENESCH
CCHRC
METARVIK EVACUATION BLDG
NEWTOK,AK

SELLING STORE 20 SHIPPING STORE 20 SALES PERSON 1632 STEVE LUSK OUR ORDER NO. 7552509-00

CUSTOMER P.O. TERMS CASH

QUANTITY ORDERED	QUANTITY SHIPPED	U/M	ITEM	DESCRIPTION		UNIT PRICE	EXTENDED PRICE
228		LF	SPC075525090760	22GA H/D GUTTER W/DOWN SPOUT	228LF	10.49	2,391.72
150		EA	SPC075525090730	26GA SB-2 SNOW BREAK 10'	150EA	24.36	3,654.00
				.			
1		EA	CFC075525090780	FREIGHT TO METARVIK LANDING	1EA	45724.55	145,724.55

Expires: 5/13/2016

283181
BFT 0.037

NET SALE	TAX SALE	TAX %	TAX	TOTAL
407679.83	407679.83	.00	.00	407,679.83

Griffard Steel, Inc.
Fairbanks, AK 99707
Phone: 907-479-2972
Fax: 907-479-0635

Quote

Date	Quote #
1/17/2016	16-009

Name / Address
Cold Climate Housing Research - CCHRC PO BOX 82489 FAIRBANKS, AK 99708

Rep	Project

Description	Qty	U/M	Total
Steel Plate Saddle Brackets -per Sketchs			
FABRICATE - Type "A" Bracket - Shipping weight 950 lbs	10		4,350.00
FABRICATE - Type "B" Bracket - Shipping weight 1,550 lbs	20		7,000.00
FABRICATE - Type "C" Bracket - Shipping weight 950 lbs	10		5,800.00
FABRICATE - Type "D" Bracket - Shipping weight 1,250 lbs	10		5,600.00
Prime Paint Only			
FOB GSI Shop			

Quote is based on current steel prices and may have to be reviewed at time of award

Total $22,750.00

January 22, 2016

Mr. Jack Hebert
Cold Climate Housing Research Center
1000 Fairbanks Street
Fairbanks, AK 99709

Re: Metarvik Evacuation Center – Building Shell Construction
Budget Estimate of Labor Hours

Dear Mr. Hebert:

GHEMM Company is pleased to be of assistance to CCHRC in developing a labor cost estimate for construction of the captioned Metarvik Evacuation Center building shell in Newtok, Alaska. After meeting with you and other members of your staff, we have performed an estimate of labor hours needed to complete this project and offer the following for your consideration.

GHEMM anticipates the project will take three (3) months of on-site construction to complete. We would expect to utilize an eight (8) man crew consisting of one superintendent, one site laborer, one equipment operator/mechanic and five carpenters. Our total estimate of labor hours is **10,480**. This is based upon a 7-12 work schedule and includes travel time out and back from Fairbanks.

GHEMM's estimate of costs for this project is **$1,380,000** and breaks down as follows:

Field Labor	$1,020,000
Home Office Labor, Support	$ 30,000
Miscellaneous Materials	$ 100,000
Tools, Equipment, Freight	$ 155,000
Bonds and Insurance	$ 15,000
Contingency	$ 60,000

We are happy to answer any questions or provide additional information about this estimate. We wish you the best of success with this project.

Sincerely,

GHEMM Company, Inc.

Meg Nordale
President

PO BOX 70507 FAIRBANKS ALASKA 99707 T 907.452.5191 F 907.451.7797 E GHEMM@GHEMM.COM

SUMMARY OF PROJECT COSTS

The Summit Report calculates the cost of finishing the modified version of the George R Watt Plan at somewhere between $5 million and $5.5 million (Summit, pg 24), with operations and maintenance costs averaging around 45k annually. The difficulty of acquiring such bulk sum funding led CCHRC to investigate a staged strategy that focuses on:
1) Protecting what has already been constructed,
2) Utilizing the SIPs without compromising R-value or creating high operations costs, and
3) Creating a usable shell that can aid the overall relocation process. However, there is no 'silver bullet' that will lessen these costs drastically. CCHRC's inquiry has produced the following totals:

STAGE 1: PROTECT THE FOUNDATION:

Materials	$6,542.20
Shipping	$2,616.88
Labor	$9,340.80
TOTAL	**$18,499.88**

STAGE 2: COMPLETE THE SHELL

(SBS) Materials	$261,955.28
(SBS) Shipping	$145,724.55
(GHEMM) Labor/Materials/Tools/CM	$1,380,000.00
TOTAL	**$1,787,679.83**

This estimate is dated January 22nd, 2016. CCHRC understands that it is uncertain when construction will begin again. NVC is advised to **add a yearly inflation rate of 4%** for each year after the date of this estimate in their funding budget. If more than nine months passes between the publication of this report and the start of the project, a review of the plans and applicable codes will be necessary.

The Summit Report notes that the level of detail in the George Watt plans only allow for a 'Framing Only' permit from the Fire Marshall. The shell completion stage outlined in this report would satisfy the framing only permit. Although no additional studies or engineering analysis would be required on the foundation, the Summit report calls for an additional **$300,000** in design fees to be budgeted toward completion of the building. Researching or validating this proposed design fee is outside the scope of this report. It is CCHRC's recommendation that funds be pursued immediately for stages 1 and 2 of the building completion. During the design process for final permitting, a better idea of completion costs can be estimated without the contingencies and unknowns that may drive up estimates.

MERTARVIK

MULTI-PURPOSE BUILDING

Retrofit Feasibility Study

APPENDIX

City & Borough of Juneau
Alaska's Capital City

Structural Insulated Panel (SIP) Roof Policy

JUNEAU PERMIT CENTER, 4TH FLOOR MARINE VIEW CENTER, (907) 586-0770

Policy On Structural Insulated Panel Roofs

Structural Insulated Panels (SIP) are premanufactured construction materials used in place of standard "stick-built" construction techniques for walls and roofs of buildings. Recent reports from engineers and observation by building inspectors indicate that these panels, when used as roofing materials, have exhibited a very high failure rate in Juneau.

These costly and potentially dangerous failures are generally appearing in the top layer of the panels which have rotted and sometimes deteriorated to an oatmeal consistency as well as in the rotting of the wooden joint materials.

The top and bottom layers of structural insulated panels usually consist of oriented strand board (OSB) which is similar to plywood but with smaller pieces of wood veneer heated and pressed into sheets with resin adhesives. In the panels, bonded between the OSB layers is a layer of foam insulation. The edges of the panels usually contain wooden splines that slip together to join the panels.

The most significant factors contributing to the panel failures in Juneau are the cool temperatures along with the elevated relative humidity in Juneau as compared to other locations. The extra moisture inside and outside our buildings makes the proper installation of the panels more critical in our environment. The specific reasons for the failures appear to be:

1) Lack of continuous vapor retarders (usually plastic sheathing often called "visqeen") on the warm side of the panels thus allowing moisture from the interior of the building into panel voids and joints,
2) Failure of sealants in the panel joints to adhere to the wood and foam (wet surfaces) and thus failure to stop moisture from travelling through the joints to the top layer of OSB
3) Lack of ventilation at the top layer of the panels to dispel the moisture.

In order to avoid future problems with Structural Insulated Panels used as roofs, the City and Borough of Juneau Building Division has adopted the following requirements on the reverse side of this sheet for the use and repair of structural insulated panels in roofs.

REQUIREMENTS FOR INSTALLATION AND REPAIR OF STRUCTURAL INSULATED PANEL ROOFS

Installation or repair of Structural Insulated Panels used in roofs in the City and Borough of Juneau shall meet the following requirements:

1. **Vapor Retarder**. The installation or repair of Structural Insulated Panels in roofs shall include a properly installed and sealed vapor retarder on the warm side of the SIP. The vapor retarder shall be rated at no more than one tenth (0.10) perm by a recognized testing agency.

2. **Roof Ventilation**. Structural Insulated Panels used as roofs shall have a "cold roof" installed over the panels that provides not less than 1½ inches of air space above the top skin of the panel. Such air space shall be continuous from top to bottom and open to the atmosphere at the top and bottom. Other designs will be reviewed and may be approved on a case by case basis.

3. **Sealants**. All voids and interfaces in SIPs, including at joints, shall be completely filled with approved adhesive sealant. Such sealant shall be firmly bonded to the panel materials.

4. **Special Inspection**. Structural Insulated Panels shall be repaired or installed under an approved Special Inspection Program as defined in the building code. The Special Inspection shall cover the following areas:

   A. Proper installation and sealing of the vapor retarder including continuous installation across support elements.

   B. All material surfaces that receive sealants and adhesives shall be dry or meet the manufacturer's specifications.

   C. All sealants and adhesives shall be applied within the temperature ranges specified by the sealant or adhesive manufacturer.

   D. All surfaces to be adhered or sealed shall be in contact with the sealant within the reaction time of the sealant. Surface skinning of the sealant shall not be allowed before the panels are in their final position.

   E. All voids in the panel structure, including voids in connections, shall be completely filled with adhesive sealant.

   F. All penetrations of the vapor retarder shall be properly sealed upon completion of the work requiring the penetration.

   G. All connections to the structure shall be completed in accordance with the manufacturer's instructions and the approved plans for the structure.

Appendix B: Shell Structural Drawings

THE METARVIK EVACUATION CENTER

DRAWING INDEX:

G-1 TITLE SHEET
G-2 GENERAL NOTES

STRUCTURAL

S-1 EXISTING FOUNDATION LAYOUT
S-2 FRAMING PLANS
S-3 SECTION & ROOF DETAIL
S-4 SECTIONS
S-5 TIMBER FRAME CONNECTION DETAILS
S-6 BRACKET DETAILS A & B
S-7 BRACKET DETAILS C & D
S-8 BRACKET DETAILS E & F
S-9 BRACKET DETAILS G & H
S-10 BRACKET DETAILS I

ARCHITECTURAL

A-1 REMOTE WALL FRAMING & SECTION

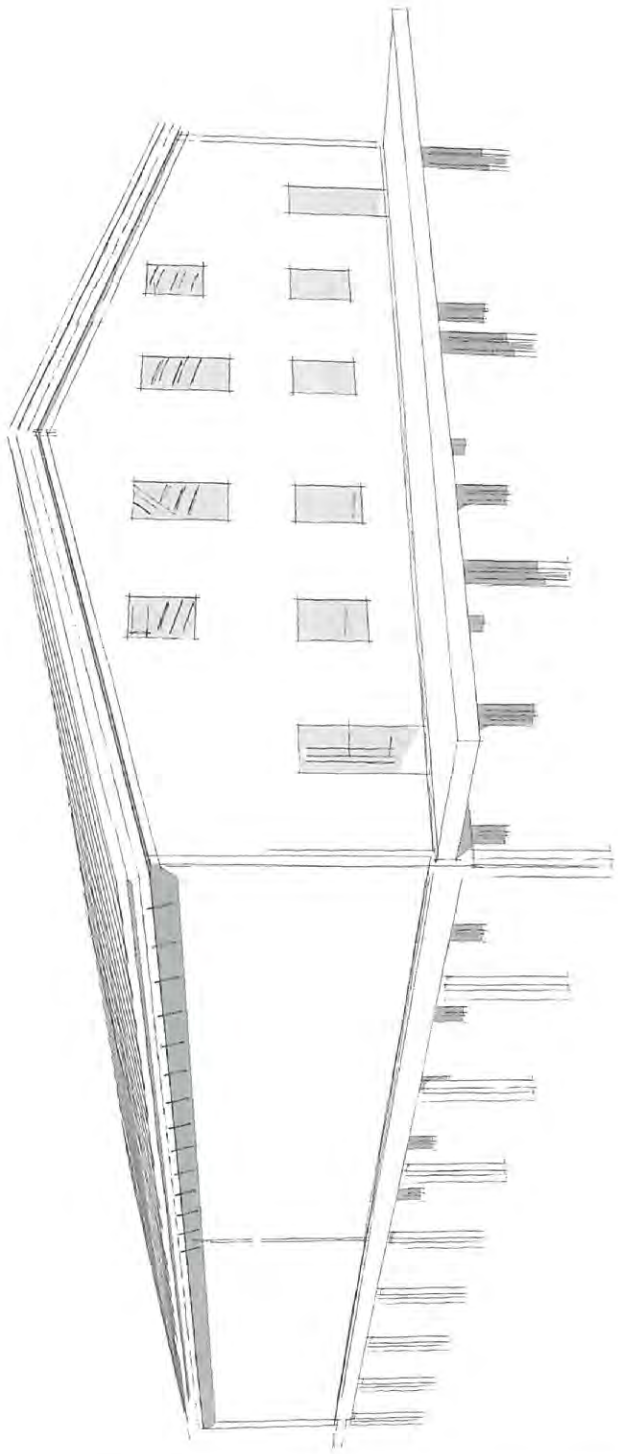

BRYAN F. BORJESSON, PE

METARVIK EVACUATION CENTER
BUILDING SHELL STRUCTURAL DESIGN

CCHRC
COLD CLIMATE HOUSING RESEARCH CENTER

DATE: January 20, 2016

TITLE SHEET

G-1

GENERAL NOTES

PROJECT DESCRIPTION:
EXISTING FOUNDATION IS STEEL H PILE ARRAY ON A ROUGHLY 14'-0" x 20'-0" GRID. THE EXISTING FIRST LEVEL FLOOR STRUCTURE IS A COMBINATION OF OPEN WEB WOOD JOISTS AND GLULAM BEAMS.

THIS DRAWING SET DETAILS THE INTENDED SHELL FOR THE STRUCTURE

CONTRACTOR SHALL FIELD VERIFY DIMENSIONS OF EXISTING FOUNDATION COMPONENTS PRIOR TO FABRICATING/ ORDERING MATERIALS FOR CONSTRUCTION

ALL DESIGN ELEMENTS NOT SPECIFICALLY SHOWN IN THE CONTRACT DOCUMENTS SHALL BE IN ACCORDANCE WITH THE IBC 2006 AND IBC 2006 REFERENCED STANDARDS

PRIOR TO FABRICATION AND CONSTRUCTION, THE CONTRACTOR SHALL VERIFY EXISTING ELEVATIONS AND DIMENSIONS ASSOCIATED WITH THE WORK. ALL OMISSIONS OR CONFLICTS BETWEEN VARIOUS ELEMENTS OF THE CONTRACT DRAWINGS AND/OR SPECIFICATIONS SHALL BE BROUGHT TO THE IMMEDIATE ATTENTION OF THE CONTRACTING OFFICER PRIOR TO PROCEEDING WITH THE RELATED WORK.

THE STRUCTURAL DRAWINGS REPRESENT THE FINISHED STRUCTURE AND DO NOT INDICATE THE METHOD OF CONSTRUCTION. CONSTRUCTION LOADS SHALL NOT EXCEED THE DESIGN LIVE LOADS.

TYPICAL DETAILS AS SHOWN ON THE DRAWINGS APPLY TO SIMILAR SITUATIONS OCCURRING ON THE PROJECT WHETHER OR NOT THEY ARE IDENTIFIED IN EACH LOCATION. COORDINATE WITH THE CONTRACTING OFFICER OF APPLICABILITY OF TYPICAL DETAIL.

STRUCTURAL DESIGN DATA

LIVE LOADS:

BUILDING OCCUPANCY CATEGORY	IV
ASSEMBLY AREAS	100 PSF
STAIRS, CORRIDORS, RESTROOMS	100 PSF
MECHANICAL/ELECTRICAL ROOMS*	125 PSF
LOFT	40 PSF

*(UNLESS INDIVIDUAL MECHANICAL EQUIPMENT GOVERNS)

SNOW LOADS:

P_g = 40 PSF	P_f = 30 PSF
C_e = .7	C_t = 1.2
I = 1.2	P_s = 30lb/SF

WIND LOADS: IN ACCORDANCE WITH 2006 IBC BASIC

BASE WIND SPEED	V = 130MPH
WIND IMPORTANCE	I = 1.15
ENCLOSURE CATEGORY	ENCLOSED
WIND EXPOSURE CATEGORY	EXPOSURE D
INTERNAL PRESSURE COEFFICIENT	GC_{PI} = .18

SEISMIC LOADS:

SEISMIC LOADS: IN ACCORDANCE WITH THE REQUIREMENTS OF THE 2006 IBC LATERAL FORCES ARE TRANSFERRED TO THE SHEAR WALL BY A FLEXIBLE DIAGRAM. RESULTING WALL FORCES ARE CALCULATED BY THE TRIBUTARY AREA METHOD.

SEISMIC IMPORTANCE FACTORS

I = 1.5	S_S = 0.150
S_1 = 0.700	SITE CLASS = E
S_{DS} = 0.0250	S_{D1} = 0.163

SEISMIC DESIGN CATEGORY: D
BASIC LATERAL FORCE-RESISTING SYSTEM:
DIAPHRAGM/SHEAR WALL
DESIGN BASE SHEAR: 30.0 kip
SEISMIC RESPONSE COEFFICIENT: C_S = 0.10
ANALYSIS PROCEDURE USED:
EQUIVALENT LATERAL FORCE PROCEDURE

ARCHITECTURAL, MECHANICAL, AND ELECTRICAL COMPONENTS:

ALL COMPONENTS SHALL BE ANCHORED TO THE BUILDING STRUCTURE. ANCHORAGE SHALL BE DESIGNED FOR ALL DESIGN CASES, INCLUDING SEISMIC, BY THE CONTRACTOR'S ENGINEER AND SUBMITTED TO THE DEPARTMENT FOR APPROVAL. DRAWINGS AND CALCULATIONS SHALL BE SEALED BY A REGISTERED ENGINEER IN THE STATE OF ALASKA.

STRUCTURAL TIMBER NOTES:

ALL MATERIAL AND WORKMANSHIP SHALL BE IN ACCORDANCE WITH THE LATEST EDITION OF THE 'TIMBER CONSTRUCTION STANDARDS' OF THE AMERICAN INSTITUTE OF TIMBER CONSTRUCTION THE 'NATIONAL DESIGN SPECIFICATION FOR STRESS-GRADE LUMBER AND ITS FASTENINGS' OF THE NATIONAL FOREST PRODUCTS ASSOCIATION, AND CHAPTER 23 OF THE IBC 2006.

MATERIALS

A. DIMENSIONAL LUMBER

SPECIES	DOUGLAS FIR
GRADE	NUMBER 2
MODULUS OF ELASTICITY	1,700,000 PSI

MINIMUM WORKING STRESSES (SPECIFY USE CONDITION):

EXTREME FIBER IN BENDING	F_b = 900 PSI
TENSION PARALLEL TO GRAIN	F_t =575 PSI
COMPRESSION PARALLEL TO GRAIN	F_c =1,350 PSI
COMPRESSION PERPENDICULAR TO GRAIN	F_c =625 PSI
HORIZONTAL SHEAR	F_v = 180 PSI

B. LAMINATED VENEER LUMBER (LVL)

SPECIES	DF-L
GRADE	2.0-2800
MODULUS OF ELASTICITY	2,000,000 PSI
EXTREME FIBER IN BENDING	F_b = 2800 PSI
TENSION PARALLEL TO GRAIN	F_t =1950 PSI
COMPRESSION PARALLEL TO GRAIN	F_c =3,000 PSI
COMPRESSION PERPENDICULAR TO GRAIN	F_c =750 PSI
HORIZONTAL SHEAR	F_v = 285 PSI

C. PLYWOOD:

FLOOR PLYWOOD SHALL BE APA RATED STUD-I-FLOOR EXPOSURE 1, SPAN RATED 24 OC, FOR PLYWOOD THICKNESS, SEE PLANS.

WALL PLYWOOD SHALL BE SPAN RATED 16/32 FOR PLYWOOD THICKNESS, SEE PLANS.

INSTALL ALL PLYWOOD WITH THE LONG DIMENSION OF THE PANEL ACROSS SUPPORTS. UNLESS NOTED OTHERWISE, WITH THE PANEL OVER TWO OR MORE SPANS. ALLOW 1/8 INCH SPACING AT PANEL ENDS AND ¼ INCH AT PANEL EDGES, UNLESS OTHERWISE RECOMMENDED BY THE PANEL MANUFACTURER. PLYWOOD SHALL BE USED IN ACCORDANCE WITH THE RECOMMENDATIONS OF THE AMERICAN PLYWOOD ASSOCIATION.

ALL PLYWOOD FLOOR PANELS SHALL BE GLUE-NAILED TO FLOOR FRAMING, NAIL SPACING PER PLANS. USE ONLY ADHESIVES CONFORMING TO APA SPECIFICATION AFG-01, APPLIED IN ACCORDANCE WITH THE MANUFACTURER'S RECOMMENDATIONS. IF NON VENEER PANELS WITH SEALED SURFACES AND EDGES ARE TO BE USED, USE ONLY SOLVENT-BASED GLUES; CHECK WITH PANEL MANUFACTURER.

THERE SHALL BE NO FIELD CUTTING OF STRUCTURAL TIMBER MEMBERS FOR THE WORK OF OTHER TRADES WITHOUT THE PRIOR REVIEW OF THE ENGINEER.

NO WOOD TREATMENTS OR PRESERVATIVES SHALL BE USED WITHOUT PRIOR REVIEW OF THE ENGINEER.

ALL NAILS SHALL BE HDG COMMON WIRE NAILS. NAILING SHALL CONFORM TO TABLE 2304.9.1 OF THE 2006 IBC. STANDARD WASHERS SHALL BE HOT DIP GALVANIZED (HDG) UNDER ALL BOLT HEADS AND NUTS CONTACTING WOOD.

ALL BOLTS USED IN TIMBER AND BRACKET CONNECTIONS SHALL BE MINIMUM GRADE 5, HDG.

THE USE OF STAPLES SHALL NOT BE PERMITTED IN ANY FRAMING OR SHEATHING CONNECTIONS

IF PNEUMATIC NAILERS ARE TO BE USED THE CONTRACTOR MUST SUBMIT A SCHEDULE OF FASTENERS AS DESIRED AS A SUBSTITUTION TO THE DEPARTMENT FOR APPROVAL

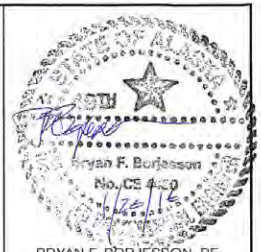

BRYAN F. BORJESSON, PE

METARVIK EVACUATION CENTER
BUILDING SHELL STRUCTURAL DESIGN

COLD CLIMATE HOUSING RESEARCH CENTER
CCHRC

DATE: January 20, 2016

GENERAL NOTES

G-2

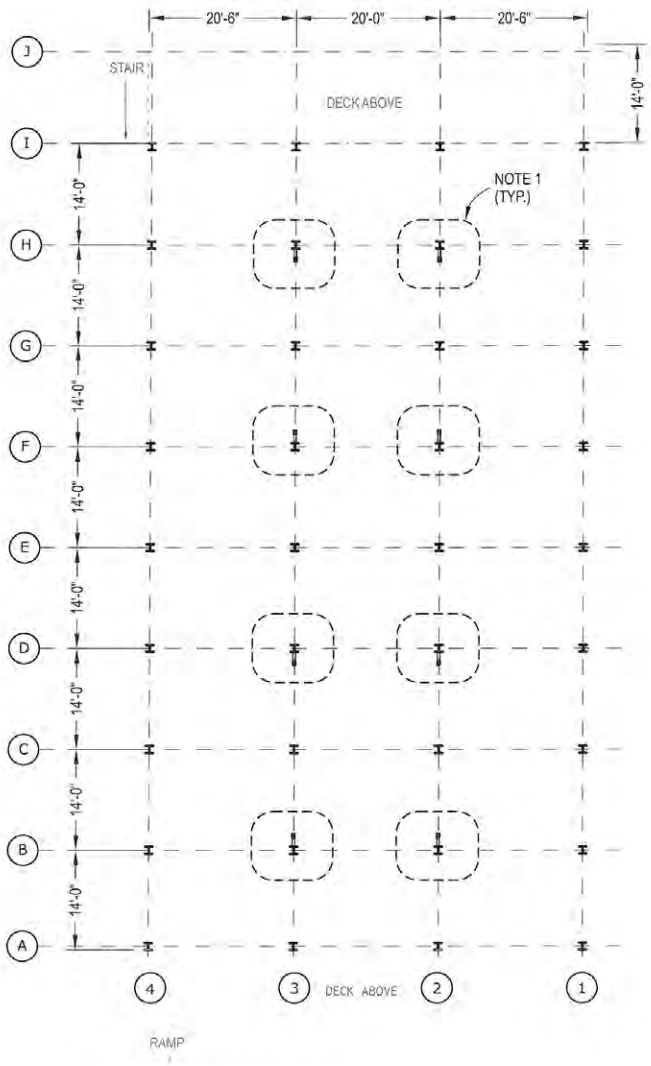

1	EXISTING H PILE FOUNDATION
S-1	scale: 1/16" = 1'-0"

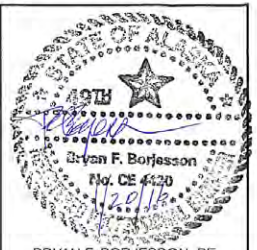

BRYAN F. BORJESSON, PE

PAGE NOTES:
1. LOCATION FOR QUEEN POST KNEE BRACES TO H PILES. REF DWGS: (1 | S-3) & (1 | S-5)

FOR MORE INFO ON THE METARVIK EVACUATION CENTER'S EXISTING FOUNDATION , REF BDS DRAWING SET (DATED FEB 2011)

METARVIK EVACUATION CENTER
BUILDING SHELL STRUCTURAL DESIGN

COLD CLIMATE HOUSING RESEARCH CENTER
CCHRC

DATE: January 20, 2016

EXISTING FOUNDATION

S-1

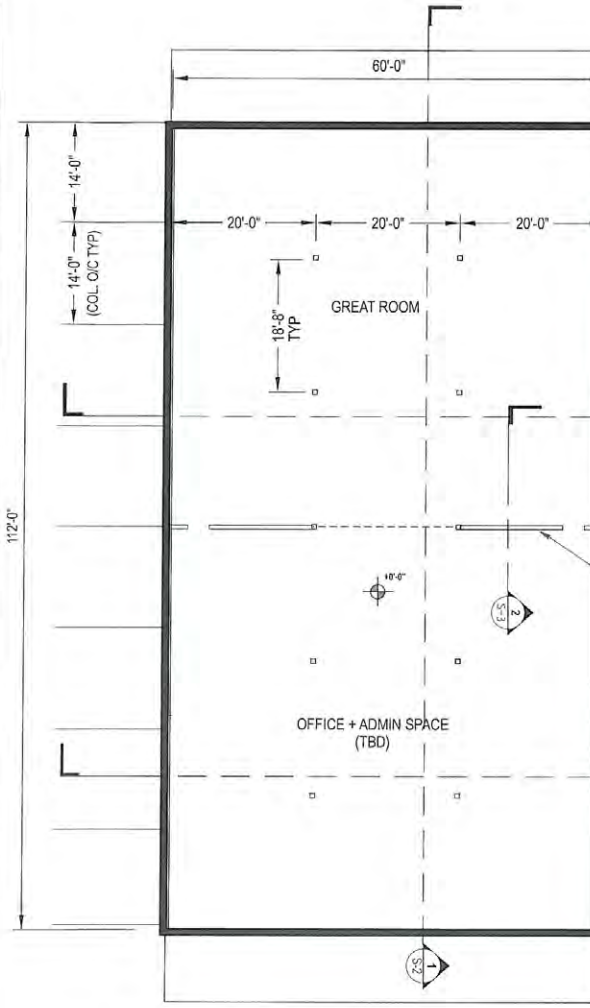

1	MAIN LEVEL (6720SF)
S-2	scale: 1/16" = 1'-0"

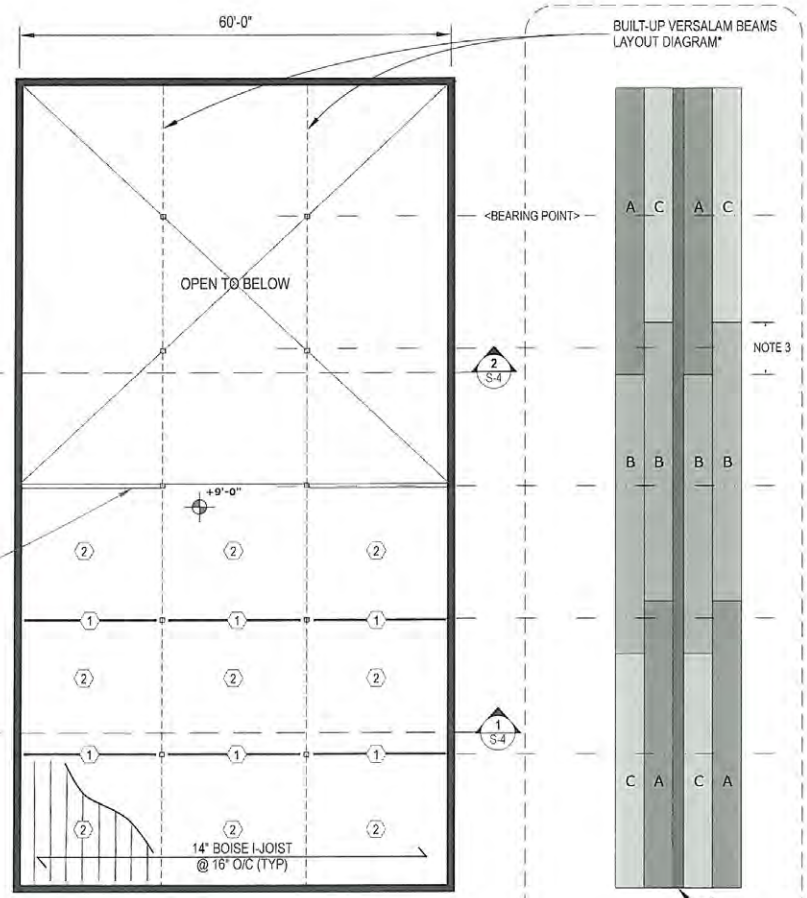

2	MEZZANINE LEVEL FRAMING (3360SF)
S-2	scale: 1/16" = 1'-0"

FRAMING KEY

ID	TYPE
1	GLULAM
2	FLOOR JOIST (BCI)

BUILT-UP BEAM KEY

ID	TYPE	DIMS
A	LVL	*LVL BEAM SPLICES MUST BE WITHIN 2'-0" OF BEARING POSTS*
B	LVL	
C	LVL	
D	PLYWOOD	

**N.T.S. BEAM WIDTHS STRETCHED FOR GRAPHIC CLARITY*

STATE OF ALASKA
Bryan F. Borjesson
No. CE 4120

BRYAN F. BORJESSON, PE

PAGE NOTES:
1. SHEAR WALL: 2x6 WALL FRAMING (16" O/C) WITH ½" PLYWOOD (BOTH SIDES OF WALL), NAILING AND BLOCKING SCHEDULE TBD BY ENGINEER.
2. STAIR ACCESS TO MEZZANINE TO BE DESIGNED BY OTHERS
3. 2'-0" MAX DISTANCE OF LVL JOINT BEYOND C.L. OF BEARING POINT

METARVIK EVACUATION CENTER
BUILDING SHELL STRUCTURAL DESIGN

COLD CLIMATE HOUSING RESEARCH CENTER
CCHRC

DATE: January 20, 2016

FRAMING PLAN

S-2

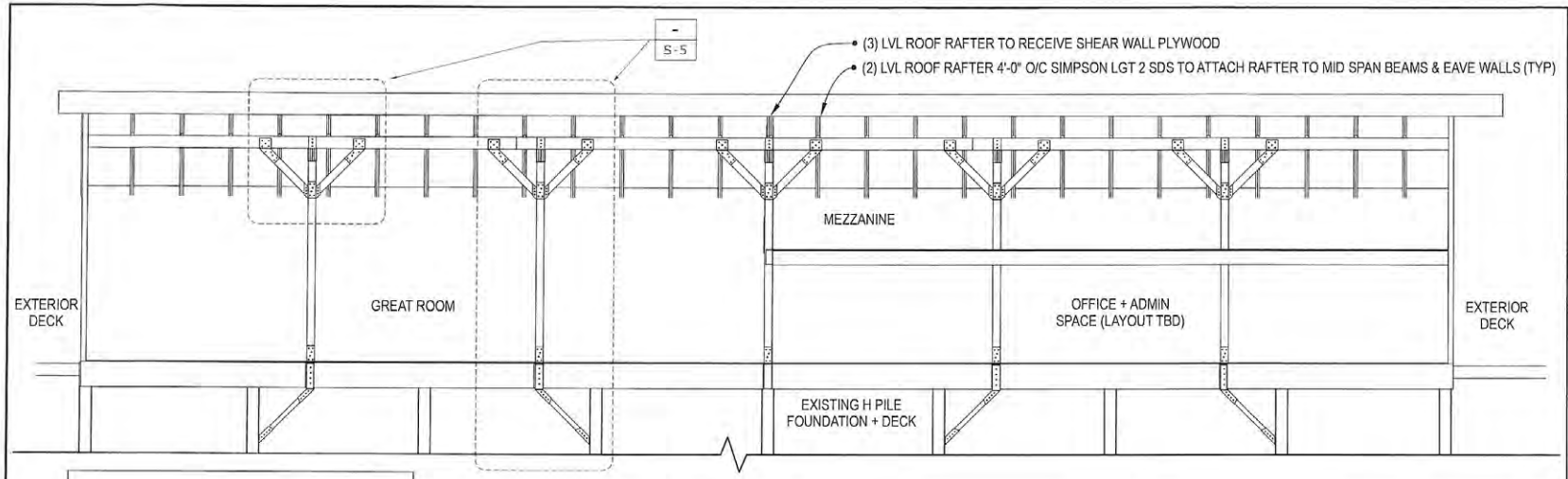

1 :: FULL BUILDING SECTION
S-3 scale: NTS

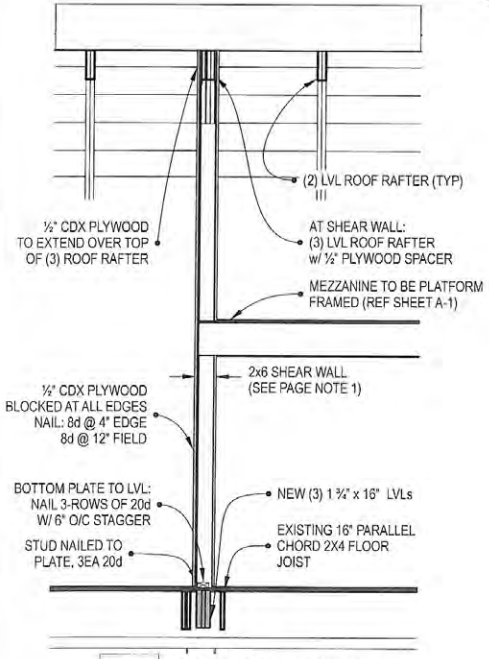

2 :: SHEAR WALL SECTION
S-3 scale: ¼" = 1'-0"

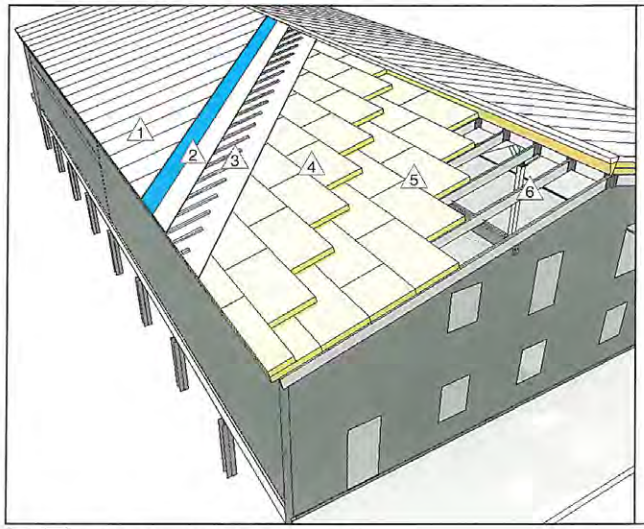

3 :: ROOF SIP PANEL LAYOUT DETAIL
S-3 scale: NTS

DRAWING NOTES:
1. METAL ROOFING
2. WATERPROOFING MEMBRANE ADHERED TO ⅝" CDX
3. 2X4 FURRING STRIPS, @ 2'-0" O/C, INLINE WITH RAFTERS, PROVIDING AIRSPACE, ATOP BREATHABLE WATERPROOFING MEMBRANE.
4. SIP PANELS RUNNING PERPENDICULAR TO LVL ROOF RAFTERS, OFFSET FROM COURSE ATOP LVL ROOF RAFTERS
5. SIP PANELS RUNNING PERPENDICULAR TO ROOF LVL RAFTERS
6. (2) LVL ROOF RAFTERS, 4' O/C, CONNECTED TO (2) LVL RIDGE BEAMS

STATE OF ALASKA
Bryan F. Borjesson
No. CE 4329
BRYAN F. BORJESSON, PE

PAGE NOTES:
1. SHEAR WALL: 2x6 WALL FRAMING (16" O/C) WITH ½" PLYWOOD (BOTH SIDES OF WALL), NAILING AND BLOCKING SCHEDULE TBD BY ENGINEER. PLYWOOD TO LAP OVER 3X-LVL RAFTER.

METARVIK EVACUATION CENTER
BUILDING SHELL STRUCTURAL DESIGN

COLD CLIMATE HOUSING RESEARCH CENTER
CCHRC

DATE: January 20, 2016

SECTION & ROOF DETAIL

S-3

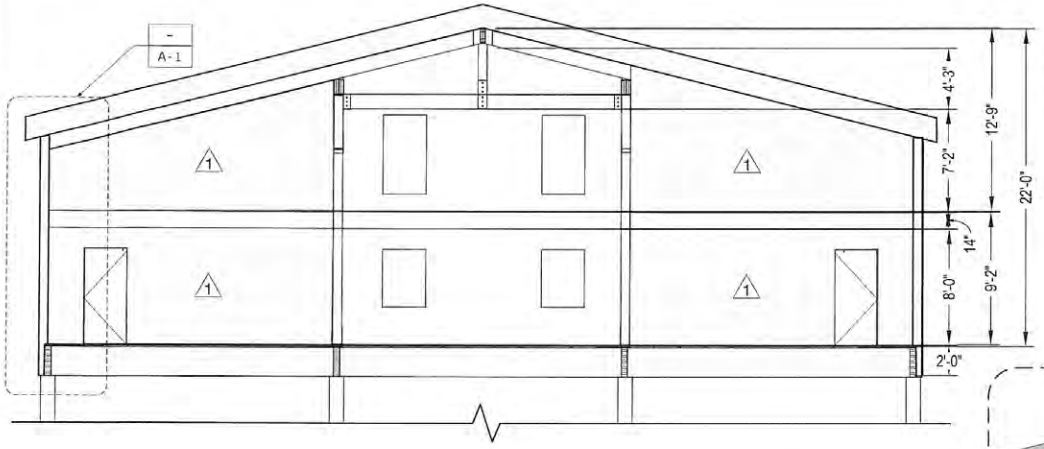

1 MEZZANINE SECTION
S-4 scale: ¼" = 1'-0"

DRAWING NOTES:

1. SHEAR WALL: 2x6 WALL FRAMING (16" O/C) WITH ½" PLYWOOD (BOTH SIDES OF WALL), NAILING AND BLOCKING SCHEDULE TBD BY ENGINEER. PLYWOOD TO LAP OVER BOTH SIDES OF 3X-LVL RAFTER.

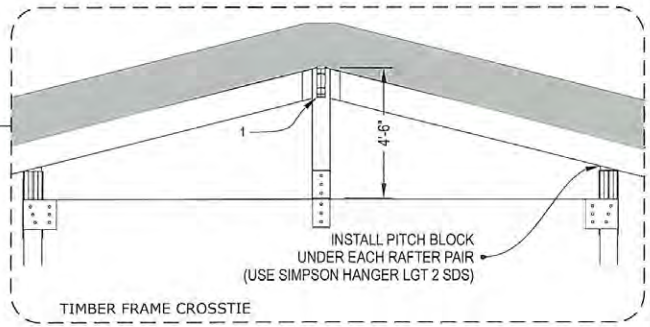

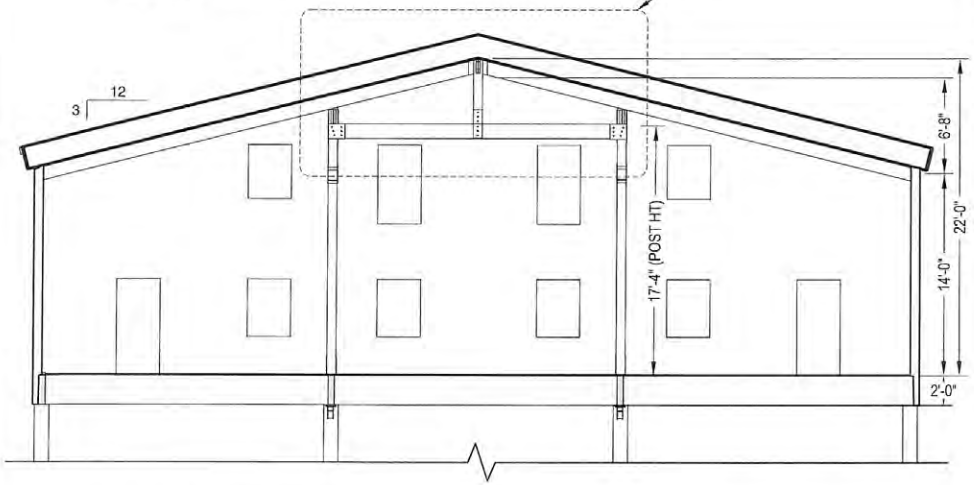

2 GREAT ROOM SECTION
S-4 scale: ¼" = 1'-0"

STATE OF ALASKA 49TH
Bryan F. Borjesson
No. CE 4320
1/25/16

BRYAN F. BORJESSON, PE

PAGE NOTES:
1. 8X8 KING POST TO BE FIELD NOTCHED AROUND (2)LVL BEAM

METARVIK EVACUATION CENTER
BUILDING SHELL STRUCTURAL DESIGN

COLD CLIMATE HOUSING RESEARCH CENTER
CCHRC

DATE: January 20, 2016

SECTION

S-4

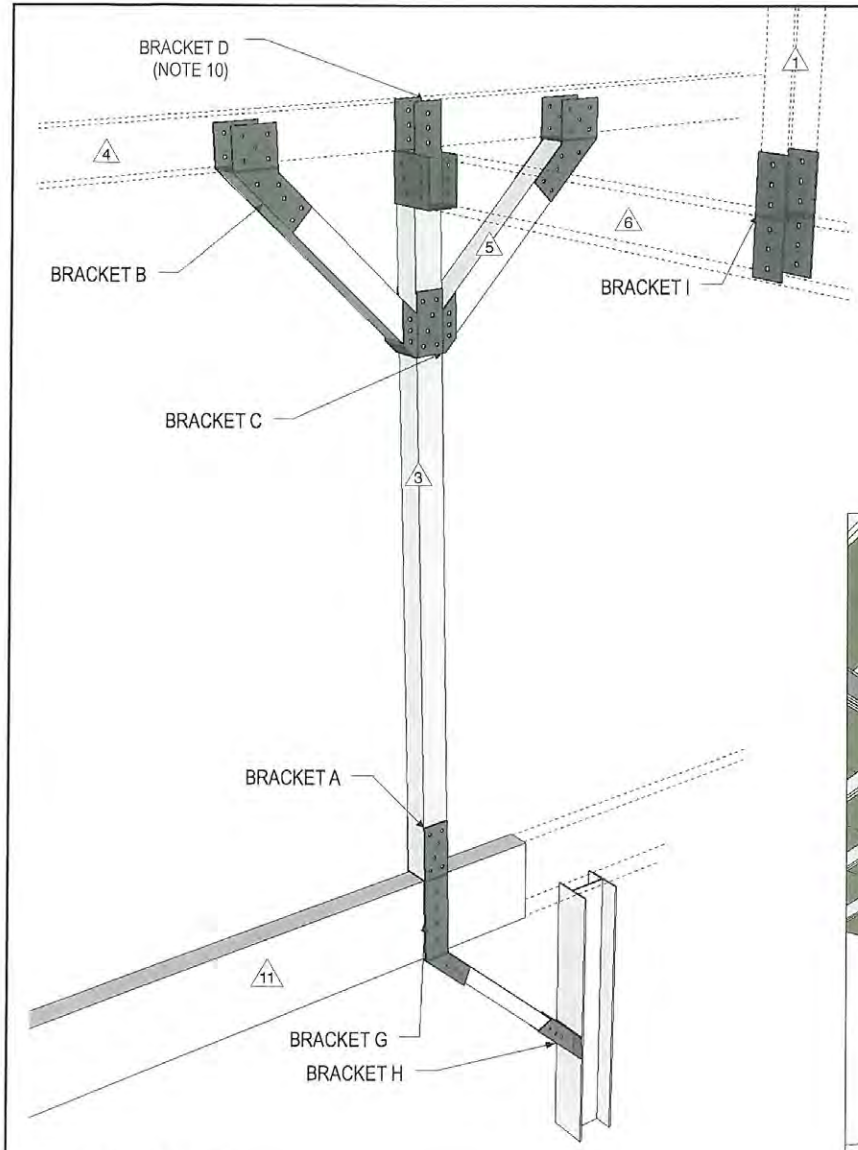

1 BRACKET LOCATIONS

S-5 scale: N.T.S.

DRAWING NOTES:

1. 8x8 KING POST
2. BUILT UP RIDGE BEAM (2)1¾"x11⅞" LAMINATED VENEER LUMBER (LVL)
3. 8x8 WOOD TIMBER QUEEN POST
4. BUILT UP BEAM: (2)LVLs + ½" PLYWOOD + (2)LVLs
5. 8x8 WOOD TIMBER KNEE BRACE
6. BUILT-UP CROSSTIE BEAM: (2)LVLs + ½" PLYWOOD + (2)LVLs
7. (2) LVL RAFTERS
8. SIP PANELS
9. SIMPSON HHUS 410 FACE-MOUNT HANGER
10. BRACKETS E & F ARE VARIATIONS OF D; USED IN SUPPORTING THE MEZZANINE FLOOR JOISTS
11. [EXISTING] 5⅛" x 24" GLULAM BEAM OR 6 ¾" x 24" GLULAM BEAM (FIELD VERIFY)

INTERIOR PERSPECTIVE

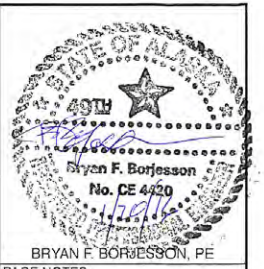

BRYAN F. BORJESSON, PE

PAGE NOTES:
1. ALL BOLT HOLES TO BE ¼" DIAMETER, TO ACCEPT ¼" BOLTS.
2. ALL STEEL TO BE ⅜" PLATE, UNLESS OTHERWISE SPECIFIED.

METARVIK EVACUATION CENTER
BUILDING SHELL STRUCTURAL DESIGN

COLD CLIMATE HOUSING RESEARCH CENTER
CCHRC

DATE: January 20, 2016

TIMBER FRAME CONNECTION DETAILS

S-5

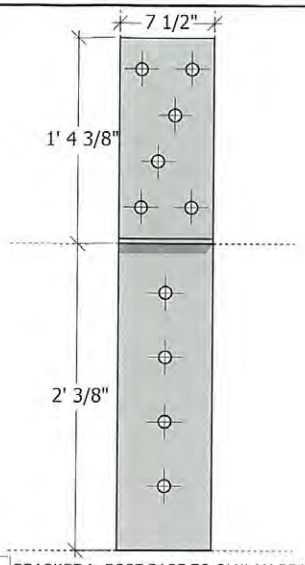

A	BRACKET A: POST BASE TO GLULAM BEAM (8 PCS)
S-6	scale: 1½" = 1'-0"

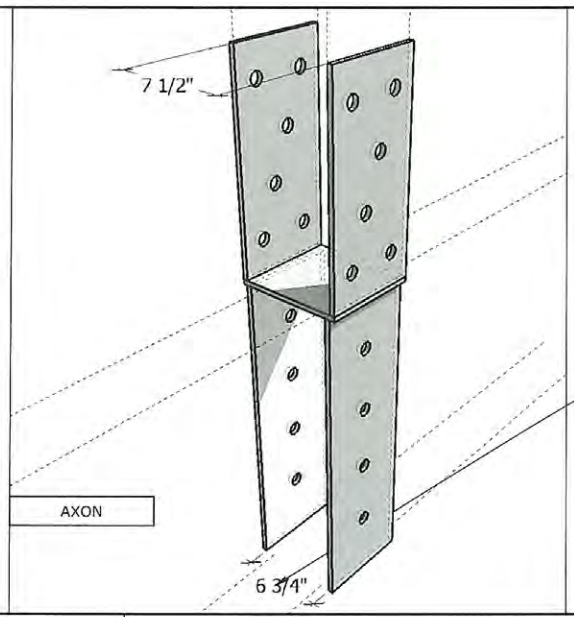

AXON

WIDTH VARIES:
(4ea) TO COVER 5 ⅛" x 24" GLULAM BEAM
(4ea) TO COVER 6 ¾" x 24" GLULAM BEAM

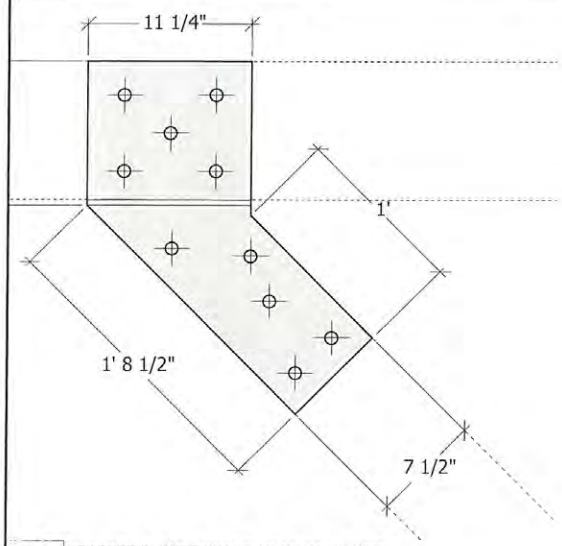

B	BRACKET B: KNEE BRACE TO BEAM (20 PCS)
S-6	scale: 1½" = 1'-0"

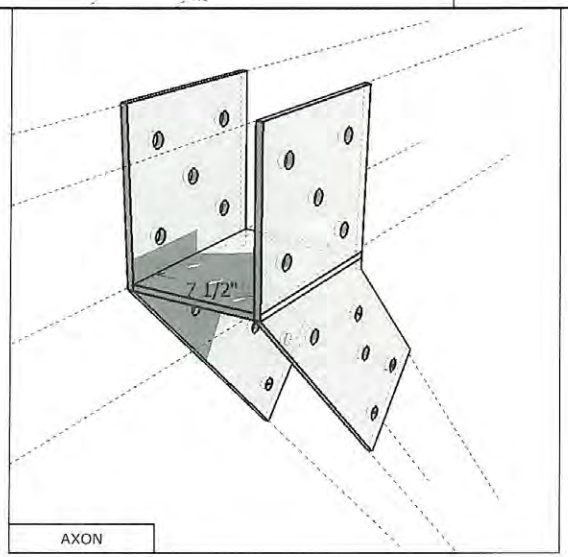

AXON

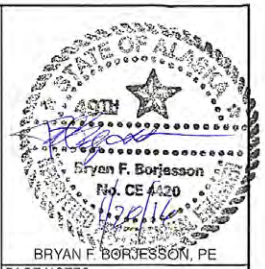

BRYAN F. BORJESSON, PE

PAGE NOTES:
1. ALL BOLT HOLES TO BE ⅞" DIAMETER, TO ACCEPT ¾" BOLTS.
2. ALL STEEL TO BE ⅜" PLATE

METARVIK EVACUATION CENTER
BUILDING SHELL STRUCTURAL DESIGN

COLD CLIMATE HOUSING RESEARCH CENTER
CCHRC

DATE: January 20, 2016

TIMBER FRAME
BRACKET DETAILS
A & B

S-6

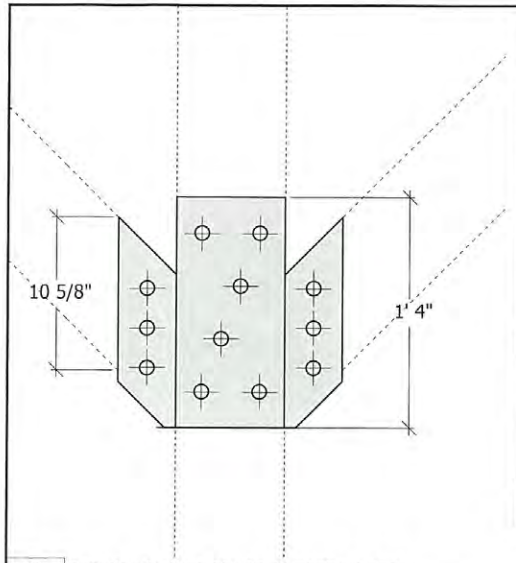

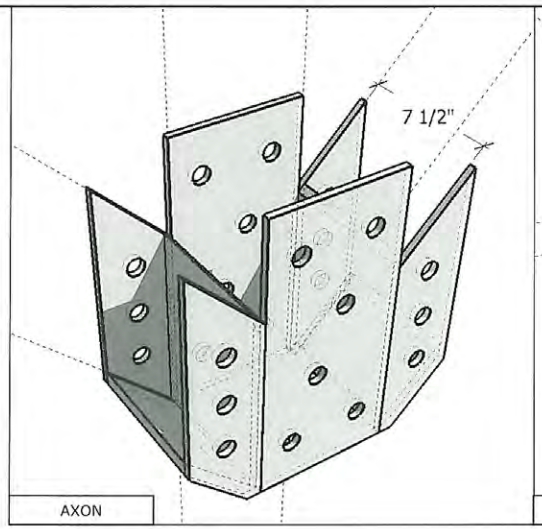

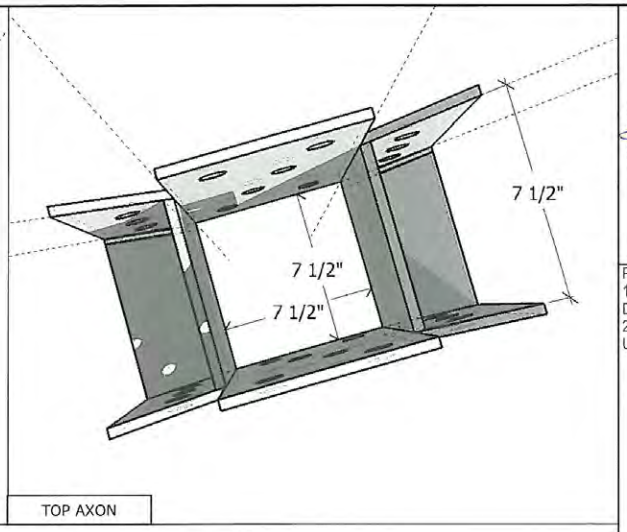

C BRACKET C: KNEE BRACE TO POST (10 PCS)

S-7 *scale: 1½" = 1'-0"*

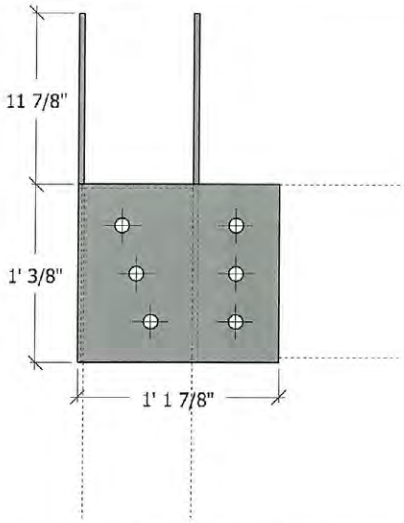

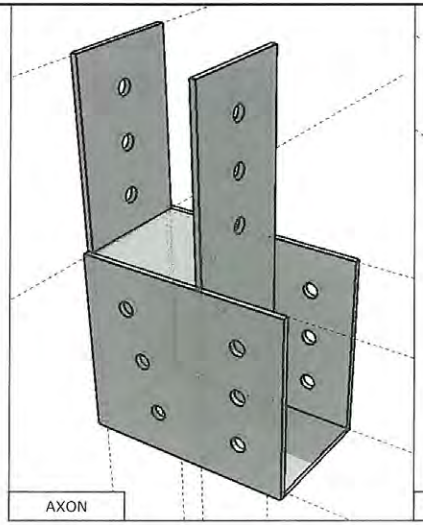

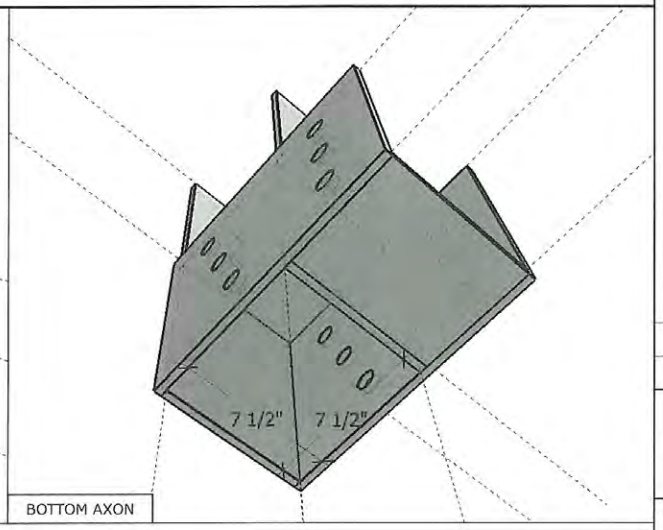

D BRACKET D: POST TO BEAM CROSSTIE (10PCS)

S-7 *scale: 1½" = 1'-0"*

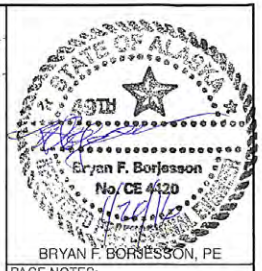

BRYAN F. BORJESSON, PE

PAGE NOTES:
1. ALL BOLT HOLES TO BE ⅛" DIAMETER, TO ACCEPT ¾" BOLTS.
2. ALL STEEL TO BE ⅜" PLATE UNLESS OTHERWISE SPECIFIED.

METARVIK EVACUATION CENTER
BUILDING SHELL STRUCTURAL DESIGN

COLD CLIMATE HOUSING RESEARCH CENTER
CCHRC

DATE: January 20, 2016

TIMBER FRAME
BRACKET DETAILS
C & D

S-7

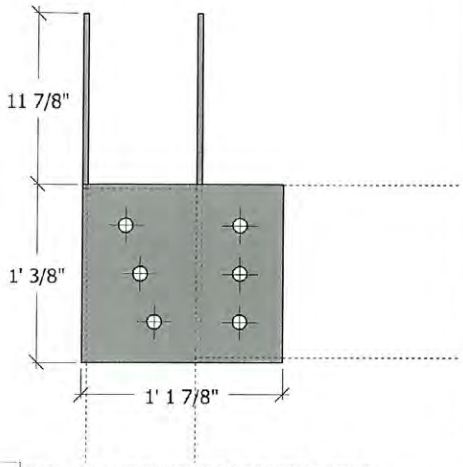

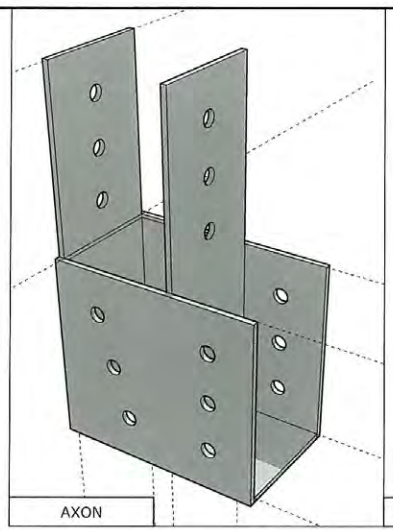

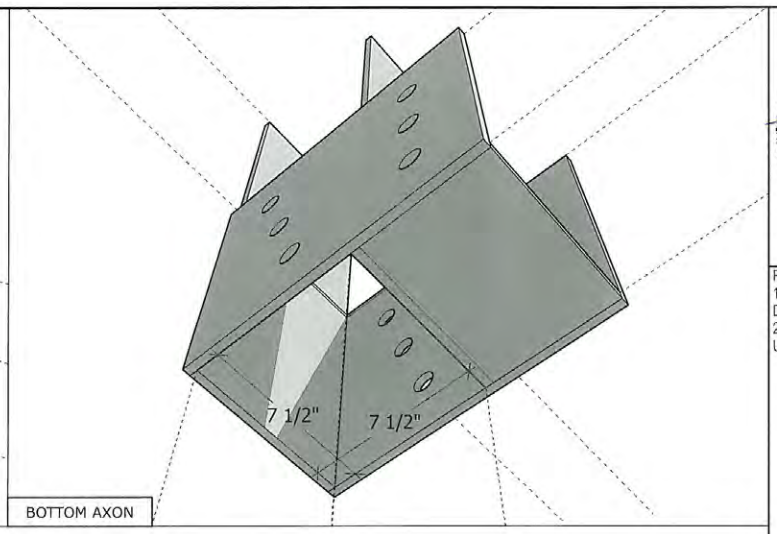

E BRACKET E: POST TO BEAM CROSSTIE (2PCS)

S-8 *scale: 1½" = 1'-0"*

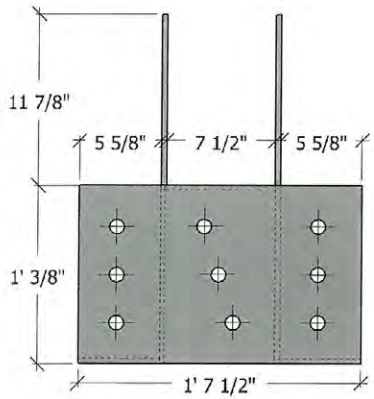

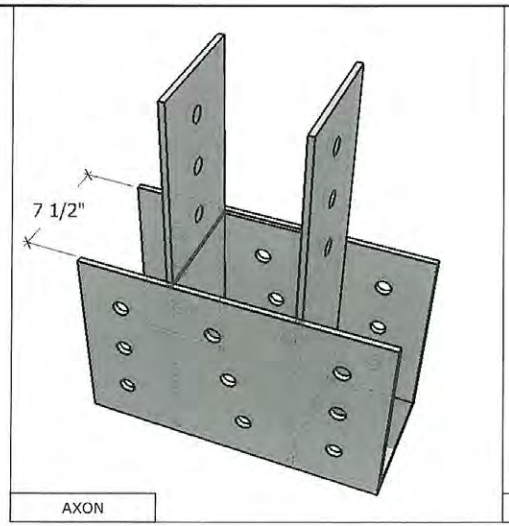

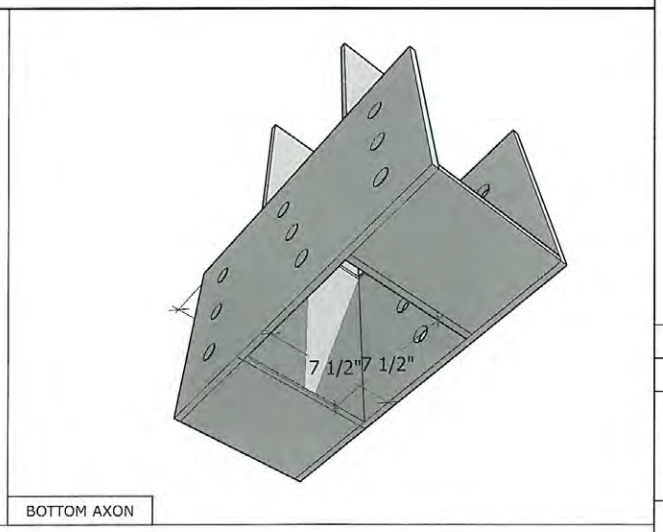

F BRACKET F: POST TO BEAM CROSSTIE (4PCS)

S-8 *scale: 1½" = 1'-0"*

STATE OF ALASKA
40TH
Bryan F. Borjesson
No. CE 4420
1/20/16

BRYAN F. BORJESSON, PE

PAGE NOTES:
1. ALL BOLT HOLES TO BE ⅛" DIAMETER, TO ACCEPT ¾" BOLTS.
2. ALL STEEL TO BE ⅜" PLATE, UNLESS OTHERWISE SPECIFIED.

METARVIK EVACUATION CENTER
BUILDING SHELL STRUCTURAL DESIGN

COLD CLIMATE HOUSING RESEARCH CENTER
CCHRC

DATE: January 20, 2016

TIMBER FRAME
BRACKET DETAILS
E & F

S-8

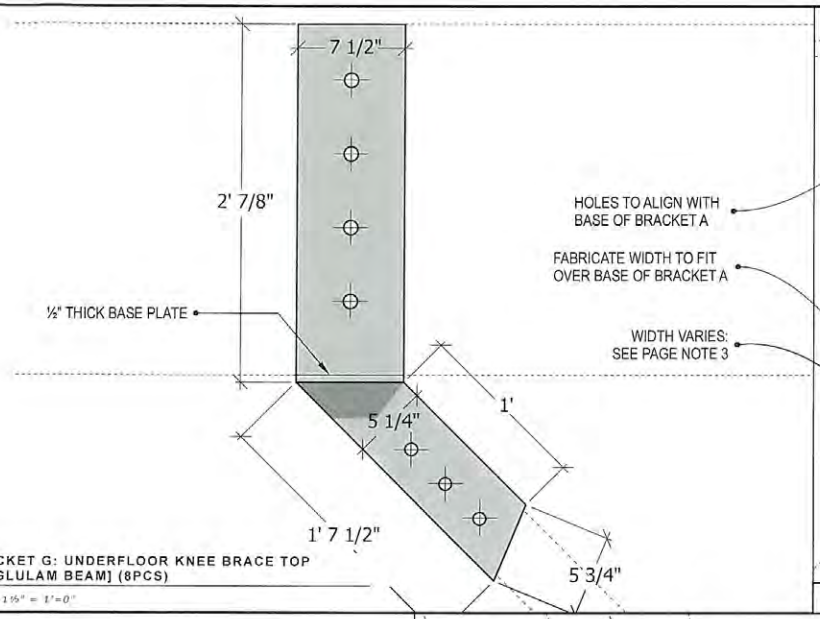

G BRACKET G: UNDERFLOOR KNEE BRACE TOP [TO GLULAM BEAM] (8PCS)

S-9 scale: 1½" = 1'-0"

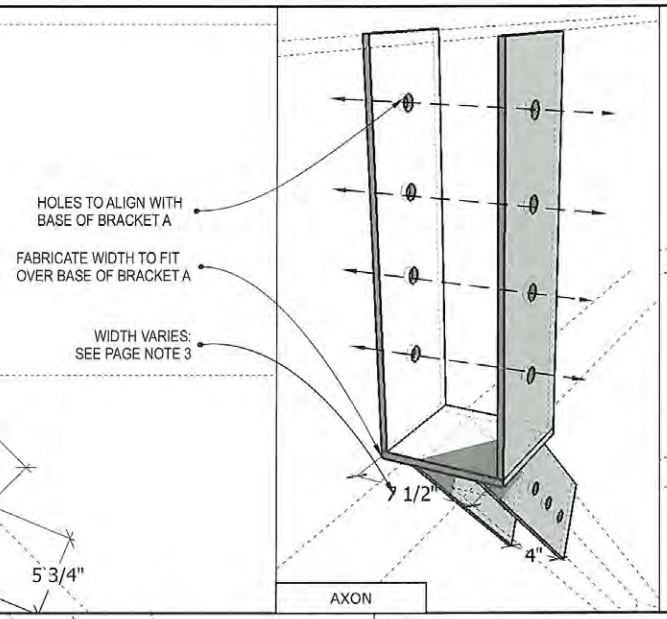

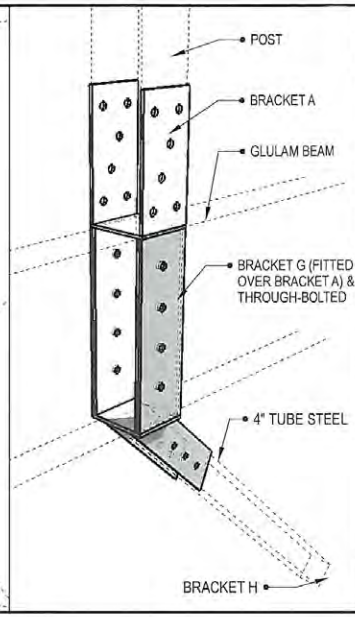

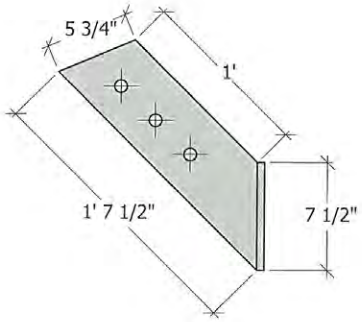

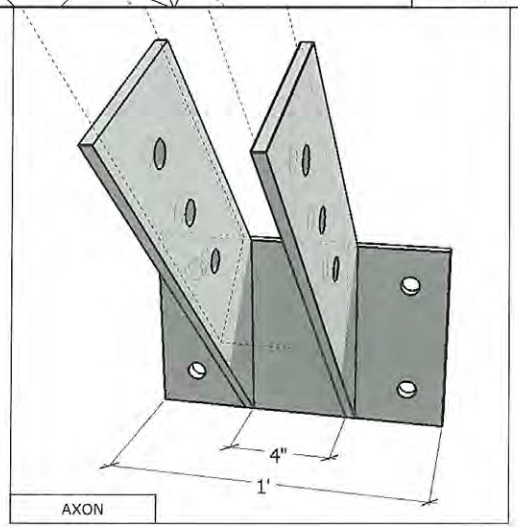

H BRACKET H: UNDERFLOOR KNEE BRACE BOTTOM [TO H PILE] (8PCS)

S-9 scale: 1½" = 1'-0"

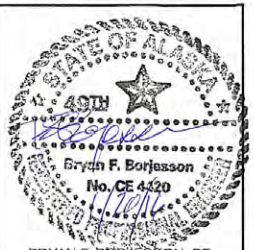

BRYAN F. BORJESSON, PE

PAGE NOTES:
1. ALL BOLT HOLES TO BE ⅞" DIAMETER, TO ACCEPT ¾" BOLTS.
2. ALL STEEL TO BE ⅜" PLATE UNLESS OTHERWISE SPECIFIED.
3. WIDTH VARIES:
(4)EA TO COVER BRACKET A ON 5 ¼" GLULAM BEAM AND (4)EA TO COVER BRACKET A ON 6 ¾" GLULAM BEAM. VERIFY ON-SITE BEAM SIZING UNDER POST LOCATIONS

METARVIK EVACUATION CENTER
BUILDING SHELL STRUCTURAL DESIGN

COLD CLIMATE HOUSING RESEARCH CENTER
CCHRC

DATE: January 20, 2016

TIMBER FRAME BRACKET DETAILS G & H

S-9

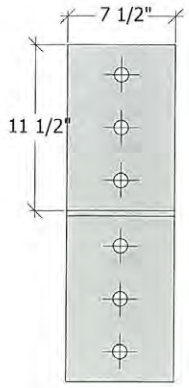

I	BRACKET i: KINGPOST TO BEAM CROSSTIE (5 PCS)
S-10	scale: 1½" = 1'-0"

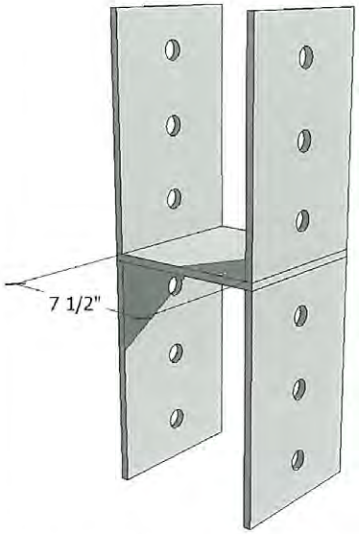

AXON

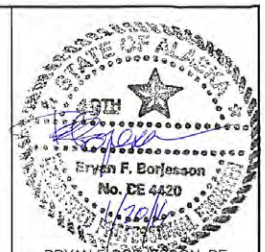

BRYAN F. BORJESSON, PE

PAGE NOTES:
1. ALL BOLT HOLES TO BE ¼" DIAMETER, TO ACCEPT ¾" BOLTS.
2. ALL STEEL TO BE ⅜" PLATE, UNLESS OTHERWISE SPECIFIED.

METARVIK EVACUATION CENTER
BUILDING SHELL STRUCTURAL DESIGN

COLD CLIMATE HOUSING RESEARCH CENTER
CCHRC

DATE: January 20, 2016

TIMBER FRAME
BRACKET DETAILS
I

S-10

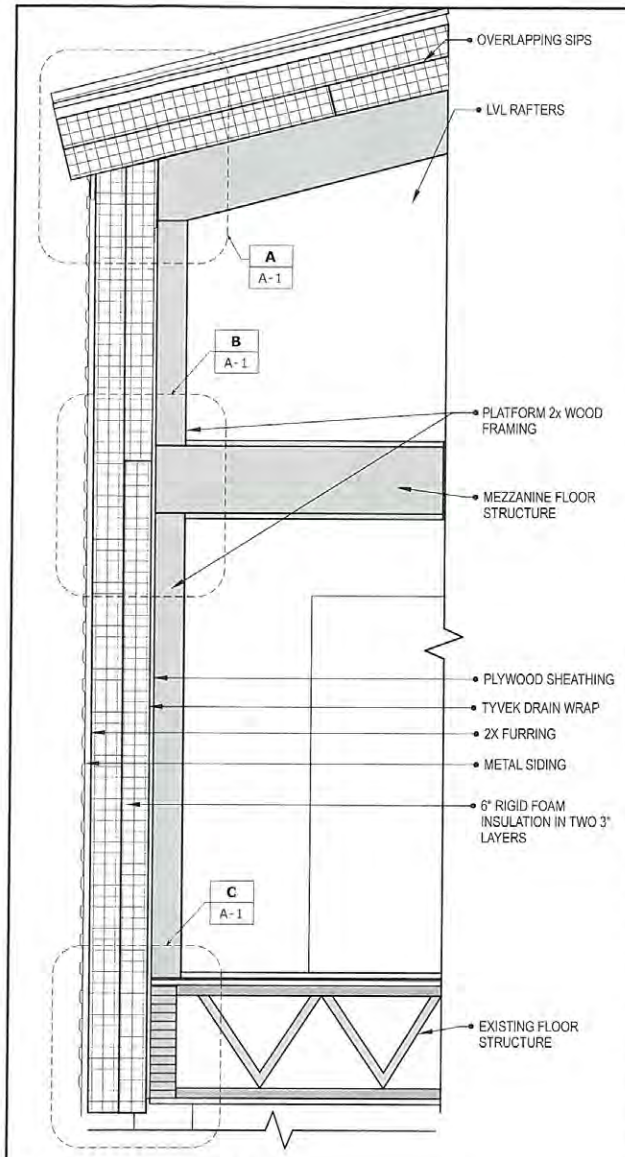

1 REMOTE WALL SECTION
A-1 scale: ½" = 1'-0"

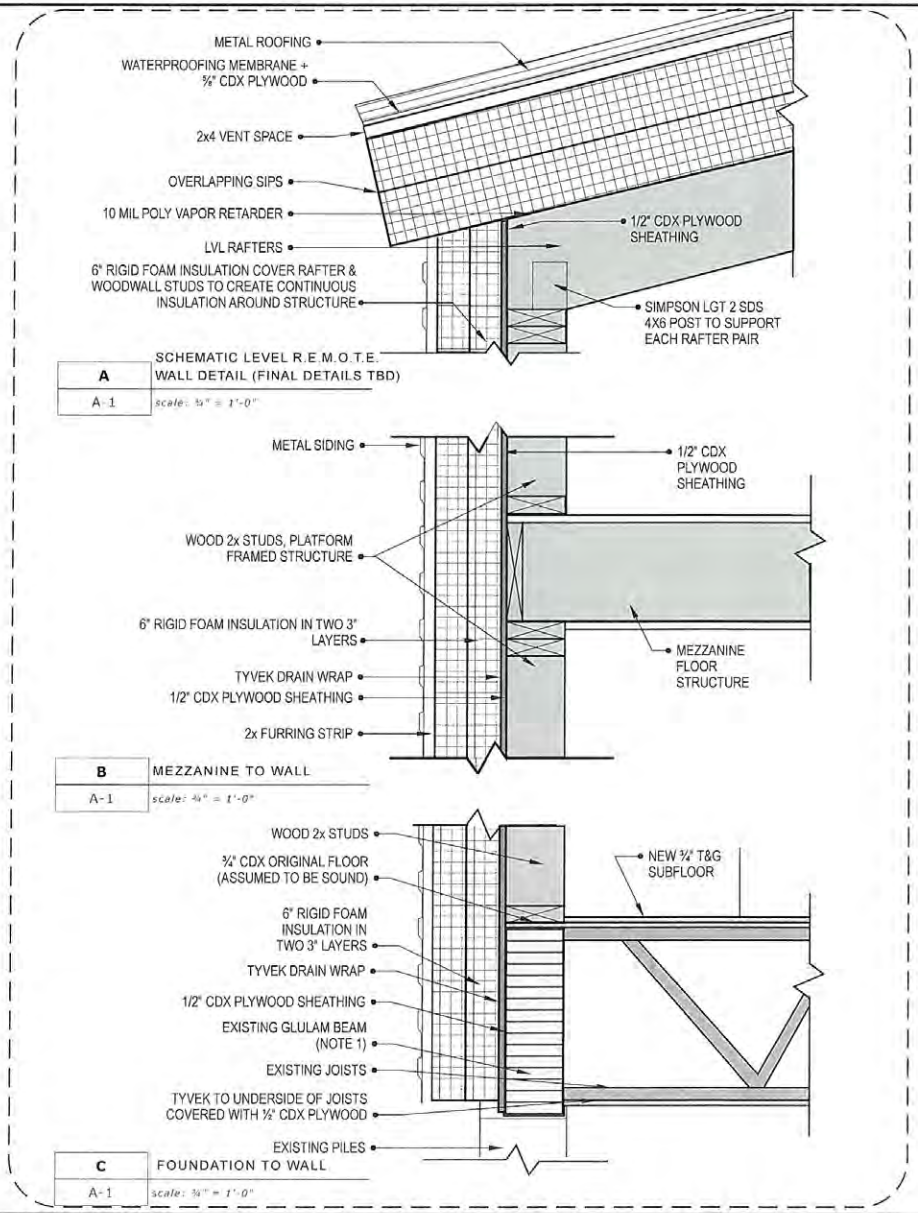

STATE OF ALASKA
Bryan F. Borjesson
1/26/16
BRYAN F. BORJESSON, PE

PAGE NOTES:
1. FOR MORE INFO ON THE METARVIK EVACUATION CENTER'S EXISTING FOUNDATION, REF BDS DRAWING SET (DATED FEB 2011)

METARVIK EVACUATION CENTER
BUILDING SHELL STRUCTURAL DESIGN

COLD CLIMATE HOUSING RESEARCH CENTER
CCHRC

DATE: January 20, 2016

R.E.M.O.T.E. WALL FRAMING + SECTION

A-1